ENGLISH

LU-2860V-7
INSTRUCTION MANUAL

CONTENTS

1. SPECIFICATIONS 1
1-1. Specifications of the sewing machine head 1
1-2. Specifications of the control box 1
2. INSTALLATION 2
2-1. Mounting positions of the devices and table 2
2-2. Installation of the sewing machine 3
2-3. Installing the oil shield 5
2-4. Pneumatic components (Only for the models provided with the stitch skipping detecting device and bobbin-thread remaining amount detecting device) 6
2-5. Installing the thread stand 8
2-6. Installing the thread guide pin 8
2-7. Installing the handwheel cover (only in the case the protection cover sensor is provided) 9
2-8. Installing the electrical box 10
2-8-1. Preparing for installation of the control box 10
2-8-2. Installing the electrical box 10
2-9. Installing the pedal sensor 10
2-10. Installing the reactor box (Only for the EU type models) 11
2-11. Installing the control box for stitch skipping detecting device (only for the models provided with the stitch skipping detecting device and the bobbin-thread remaining amount detecting device) 12
2-12. Installing the accessory ring core (Only for the EU type models) 13
2-12-1. Installing the accessory ring core supplied with the electrical box 13
2-12-2. Installing the accessory ring core supplied with the sewing machine (only for the optional category F type) 13
2-13. Connecting the power switch cable 14
2-13-1. Installing the power switch 14
2-13-2. Connecting the power source cord 15
2-14. Connecting the cords 16
2-14-1. Connecting the cords coming from the sewing machine 16
2-14-2. Connection of the cords coming from the stitch skipping detecting device, bobbin-thread remaining amount detecting device and cover sensor 17
2-15 Handling the cords 20
2-15-1. Handling the cords coming from the control box 20
2-15-2. Handling the cords coming from the control box for stitch skipping detecting device 20
2-16. Attaching the connecting rod 21
2-17. Adjustment of the pedal 22
2-17-1. Installing the connecting rod 22
2-17-2. Adjusting the pedal angle 22
2-18. Pedal operation 22
2-19. Lubrication 23
2-20. How to use the operation panel (Basic explanation) 24
2-20-1. Selection of the language (operation to be done at first) 24
2-20-2. Names and functions of the panel keys 26
2-20-3. Basic operation 27

3. PREPARATION BEFORE SEWING 28
3-1. Attaching the needle 28
3-2. Attaching and removing the bobbin 28
3-3. Threading the hook 29
3-4. Winding a bobbin 29
3-5. Threading the machine head 31
3-6. Installing the attachment 32
4. ADJUSTING THE SEWING MACHINE 33
4-1. Thread tension 33
4-1-1. Adjusting the tension of thread tension controller No. 1 33
4-1-2. Adjusting the needle thread tension (Active tension) 33
4-1-3. Adjusting the bobbin thread tension 33
4-2. Thread take-up spring 34
4-2-1. When you want to change the stroke of the thread take-up spring 34
4-2-2. When you want to change the tension of the thread take-up spring 34
4-3. Presser foot (Active presser device) 35
4-3-1. Presser foot pressure 35
4-3-2. Micro-lifter function 35
4-4. Adjusting the stitch length 36
4-5. Changing the sewing speed 36
4-6. Adjusting the alternating vertical movement amount 37
4-7. Thread trimming and condensation stitching function 38
4-8. LED hand light 40
4-9. Reverse feed stitching 40
4-10. Jog dial 40
4-11. Custom switch 41
4-12. Adjusting the oil quantity in the hook 44
5. OPERATION OF THE SEWING MACHINE 45
5-1. Resetting the safety clutch 45
5-2. Lifting the presser foot at an emergency 45
5-3. Power lamp 46
5-4. Knee switch 47
6. HOW TO USE THE OPERATION PANEL 48
6-1. Explanation of the sewing screen (when selecting a sewing pattern) 48
6-2. Sewing patterns 52
6-2-1. Sewing pattern configuration 52
6-2-2. List of sewing patterns 53
6-2-3. Reverse feed stitching (at start) pattern 55
6-2-4. Reverse feed stitching (at end) pattern 63
6-2-5. Editing the sewing patterns 64
6-2-6. List of pattern functions 69
6-2-7. Teaching function 77
6-2-8. One-touch utility changeover function 79
6-2-9. Registration of a new sewing pattern 80
6-2-10. Copying a pattern 82
6-2-11. Narrow-down function 83

6-3. Counter function....85
6-3-1. Displaying the sewing screen under the counter display mode....85
6-3-2. Types of the counter....85
6-3-3. How to set the counter....86
6-3-4. How to reset the count-completion state....89
6-4. Simplified chart of panel displays....90
6-5. List of memory switch data....91
6-6. List of errors....96
6-7. Memory switch data....100
7. CARE....102
7-1. Standby mode....102
7-2. Cleaning....103
7-3. Applying grease....103
7-4. Replacing the fuse....104
7-5. Disposal of batteries....104
8. ADJUSTMENT OF THE MACHINE HEAD (APPLICATION)....105
8-1. Needle-to-hook relation....105
8-2. Adjusting the timing between the needle and the blade point of hook....106
8-3. Adjusting the hook needle guard....107
8-4. Adjusting the bobbin case opening lever....107
8-5. Adjusting the position of counter knife, knife pressure and clamp pressure....108
8-6. Adjusting the thread trimming cam timing....109
8-7. Active-presser multi-layered section detection function....110
8-7-1. Multi-layered section detection function....110
8-7-2. Turning OFF the multi-layered section changeover function by the number of stitching....113
8-8. Grease shortage alarm....115
8-8-1. Regarding the grease shortage alarm....115
8-8-2. E221 Grease-shortage error....115
8-8-3. Regarding K118 error resetting procedure....116
9. HOW TO USE THE OPERATION PANEL (APPLICATION)....117
9-1. Management of sewing patterns....117
9-1-1. Creation of a new pattern....117
9-1-2. Copying a pattern....119
9-1-3. Deleting a pattern....120
9-2. Setting up the polygonal-shape stitching....121
9-2-1. Editing a polygonal-shape stitching pattern....121
9-2-2. Creating a new polygonal-shape stitching pattern....127
9-2-3. Setting the step from which polygonal-shape stitching is started....127
9-3. Cycle pattern....128
9-3-1. Selecting the cycle pattern....128
9-3-2. Editing cycle sewing data....129
9-3-3. Creating a new cycle pattern....130
9-3-4. Setting the step from which cycle sewing pattern is started....132
9-4. Custom pitch....133
9-4-1. Selecting a custom pitch....133
9-4-2. Creating a new custom pitch....135
9-4-3. Custom pitch edit function....138

9-4-4. Copying/deleting a custom pitch 139
9-5. Condensation custom pattern 140
9-5-1. Selecting the condensation custom 140
9-5-2. Creating a new condensation custom 140
9-5-3. Condensation custom edit function 143
9-5-4. Copying/deleting a condensation custom 144
9-6. Simple lock of the screen 145
9-7. Version information 145
9-8. Adjustment of brightness of the LED panel 146
9-9. Information 147
9-9-1. Data communication 147
9-9-2. USB 150
9-9-3. NFC 151
9-10. Key customization 152
9-10-1. Assignable data 152
9-10-2. How to assign a function to a key 153
9-11. Maintenance management function 155
9-12. Setting the ancillary devices 159
9-12-1. Setting the ON/OFF status of suspended ruler 160
9-12-2. Setting the ON/OFF status of stitch skipping detecting device 160
9-12-3. Setting the ON/OFF status of bobbin-thread remaining amount detecting device 161
9-12-4. Setting the ON/OFF status of cover sensor device 161
10. SEWING SPEED TABLE 163
11. TROUBLES IN SEWING AND CORRECTIVE MEASURES 164

1. SPECIFICATIONS

1-1. Specifications of the sewing machine head

LU-2860V-7-0B-B-S-△

Classification of options

Z	Not provided
F	Protective cover sensor Stitch skipping detecting device Bobbin-thread remaining amount detecting device

Item	Application
Model	LU-2860V-7
Sewing speed	Max. 3,500 sti/min (See **"10. SEWING SPEED TABLE" p.163**.)
Stitch length	Max. 12 mm
Needle	SCHMETZ 134-35 (Nm 125 to Nm 200) (Standard : Nm 160)
Applicable thread size for sewing	#30 to #0 (US: #46 to #266, Europe: 60/3 to 10/3)
Applicable thread size to be cut	#30 to #0 (US: #46 to #266, Europe: 60/3 to 10/3)
Motor	AC servo motor
Presser foot pressure control	Electronic control
Horizontal feed control	Electronic control
Alternate vertical feed control	Electronic control
Lubricating oil	JUKI New Defrix Oil No. 1 (equivalent to ISO standard VG7) or JUKI MACHINE OIL No. 7
Number of patterns	Sewing pattern ..... 99 patterns (For the polygonal shape sewing, as many as 10 patterns can be registered.) Cycle sewing pattern ..... 9 patterns Custom-pitch pattern ..... 20 patterns Condensation custom pattern ..... 9 patterns
Noise	- Equivalent continuous emission sound pressure level (L_{pA}) at the workstation: A-weighted value of 91.0 dB; (Includes K_{pA} = 2.5 dB); according to ISO 10821- C.6.2 - ISO 11204 GR2 at 3,500 sti/min. - Sound power level (L_{WA}); A-weighted value of 91.0 dB; (Includes K_{WA} = 2.5 dB); according to ISO 10821- C.6.2 - ISO 3744 GR2 at 3,500 sti/min.

1-2. Specifications of the control box

Supply voltage	Single phase 100 to 120V	3-phase 200 to 240V	Single phase 220 to 240V	Single phase 220 to 240V CE
Frequency	50Hz/60Hz	50Hz/60Hz	50Hz/60Hz	50Hz/60Hz
Operating environment	Temperature : 0 to 35˚C Humidity : 90% or less	Temperature : 0 to 35˚C Humidity : 90% or less	Temperature : 0 to 35˚C Humidity : 90% or less	Temperature : 0 to 35˚C Humidity : 90% or less
Input	600VA	600VA	600VA	600VA

2. INSTALLATION

2-1. Mounting positions of the devices and table

The devices including the oil pan and electrical box are to be mounted to the positions as shown in the figure below.

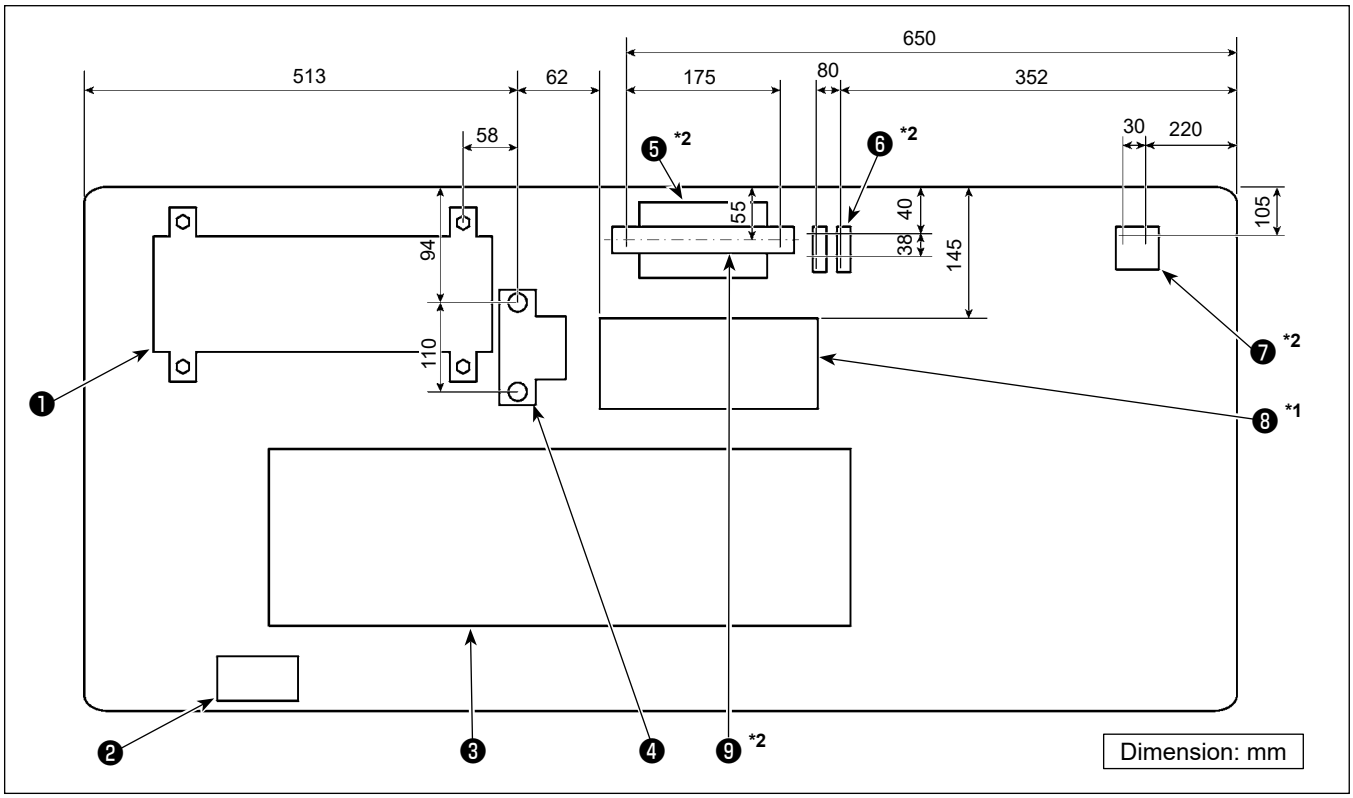

*** Dimensions are the reference values.**

❶ Control box

❷ Power switch

❸ Oil pan

❹ Pedal sensor

❺ *2 Control box for stitch skipping detecting device

❻ *2 Solenoid valve

❼ *2 Regulator

❽ *1 Reactor box

❾ *2 DIN rail

***1: Only for the EU type models**

***2: Only for the models provided with the stitch skipping detecting device and bobbin-thread remaining amount detecting device**

2-2. Installation of the sewing machine

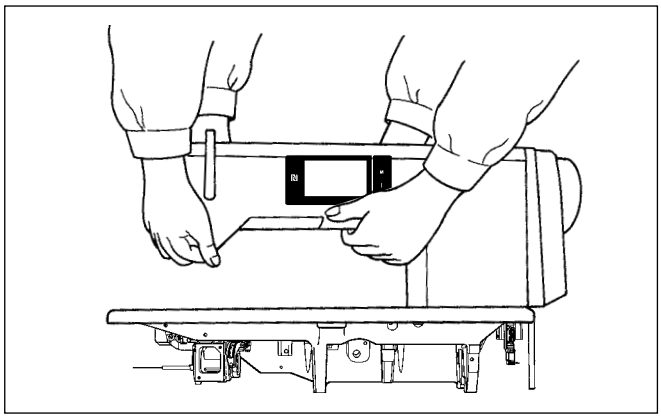

1) To prevent possible accidents caused by the full of the sewing machine, perform the work by two persons or more when the machine is moved.

Never hold the handwheel since it rotates.

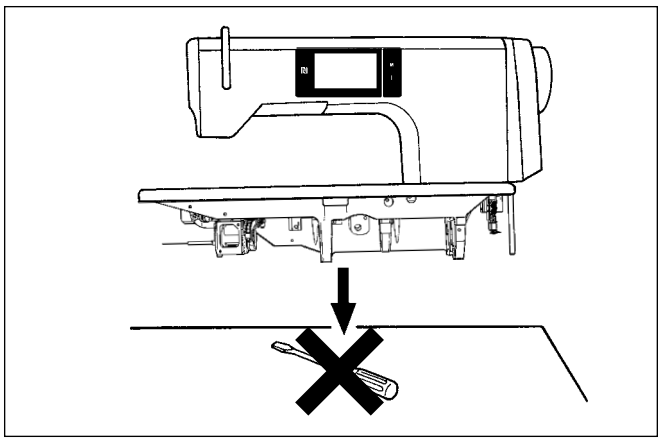

2) Place the sewing machine on a horizontal and plane place when placing it and do not place any protruding thing such as a screwdriver or the like.

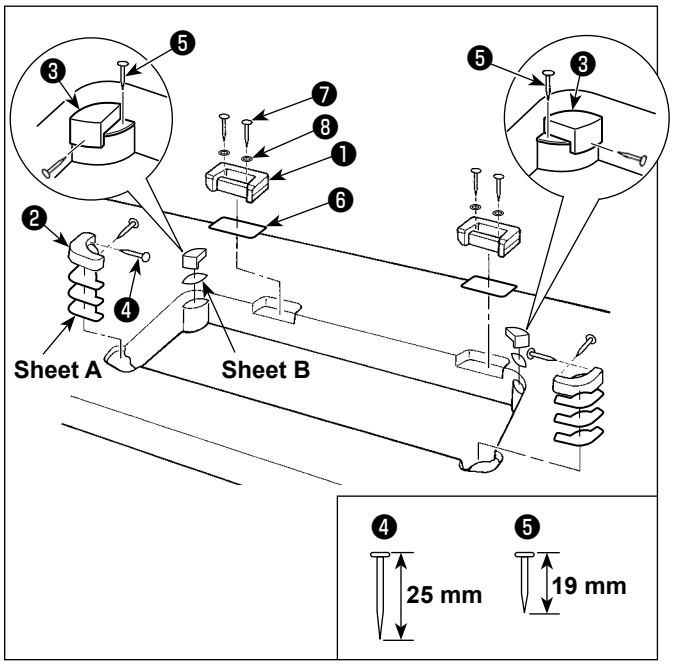

3) Attaching the hinge seats and the support rubbers of the machine head
Fix accessory hinge seat ❶ supplied with the unit on the table with wood screw ❼ and washer ❽ while placing sheet plate ❻ between the hinge seat and the table as shown in the figure.
Fix machine head support rubbers ❷ and ❸ on the table with nails while putting sheets **A** (standard: 3 pieces) and sheet **B** (standard: 1 piece) under the machine head support rubbers.
Use nail ❺ for sheet **B** and nail ❹ for sheets **A**.
There are two different machine head support rubbers ❸ ; i.e., the rubber for the right and that for the left. Be sure to check the types of the support rubbers before fixing them.

Sheet A (eight pieces) and sheet B (four pieces) are supplied with the machine as accessories.
For the sheet A, three sheets are to be used as standard for each mounting position. For the sheet B, one sheet is to be used as standard. (The state shown in the left figure)
The sheets A and B are used for adjusting the height of the top surface of the bed. Use one more sheet to increase the height, or use only one sheet to decrease it.

Be sure to use a short nail ❺ for sheet B. If long nail ❹ is used, the nail tip can penetrate the table giving rise to a risk of injury.

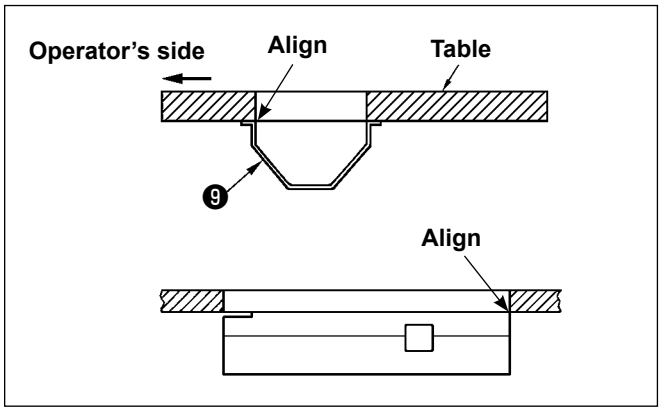

4) Attaching the oil pan
Fix the oil pan ❾ supplied with the machine on the table by tightening ten wood screws.

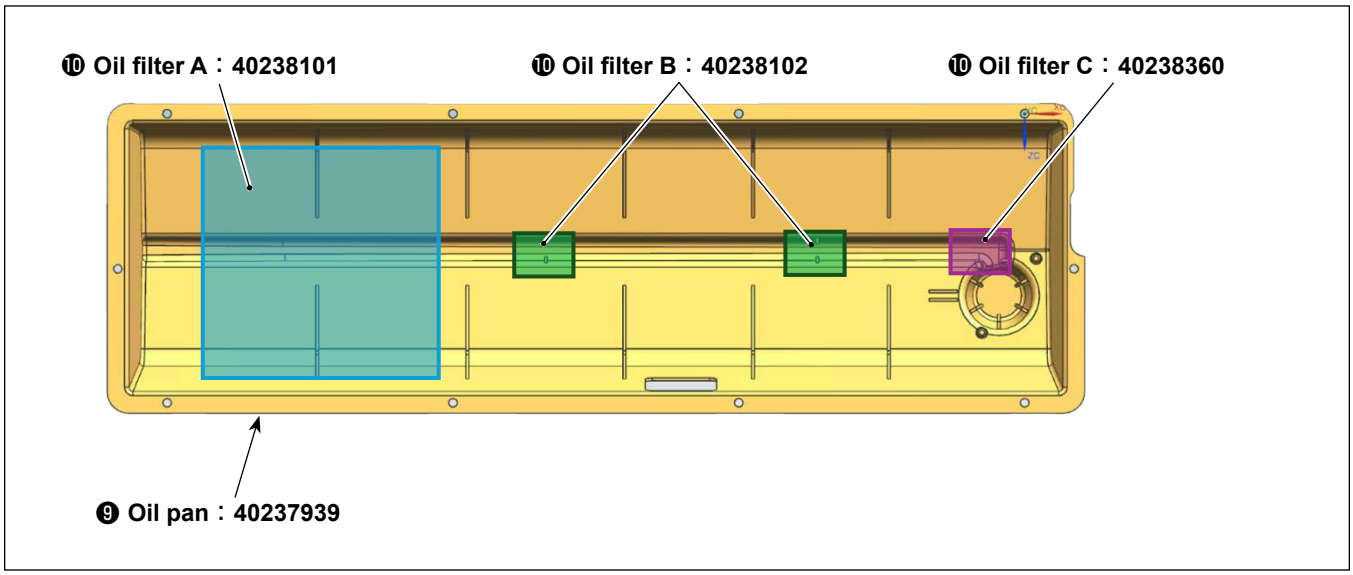

5) Install the filter ❿ in the oil pan ❾ as shown in the figure.

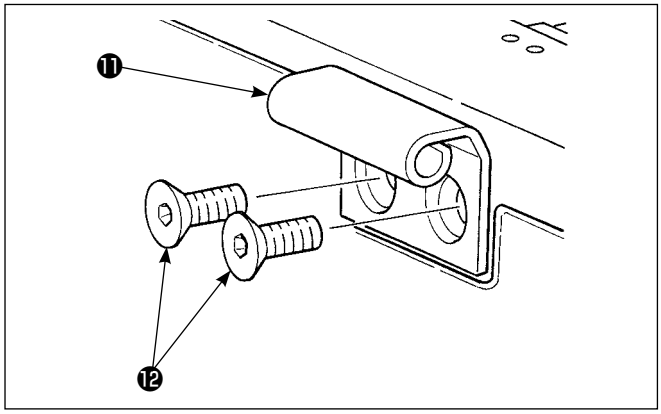

6) Install hinge ⓫ on the bed with screw ⓬ . Engage the hinge with the rubber hinge of the table. Then, place the machine head on the machine head support rubber.

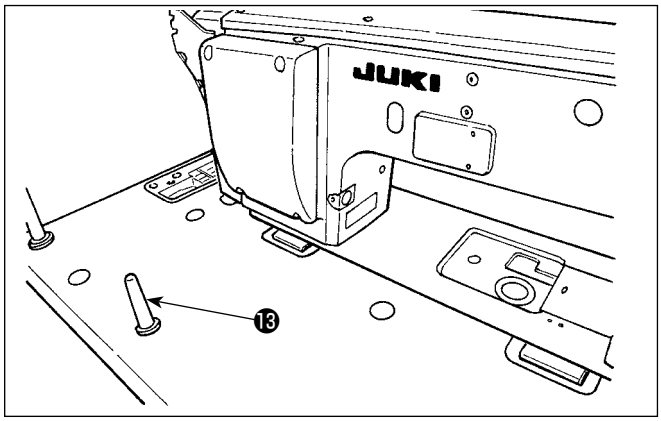

7) Securely attach head support rod ⓭ until its rib is closely pressed against the table.

> **Caution**
> **When it is really necessary to conduct work with the machine head supporting rod removed for the purpose of maintenance and repair, it is necessary to carry out the work with two or more persons.**
> **In the case the machine head is tilted more than necessary, oil can leak from the oil inlet of the oil tank. It is, therefore, necessary to remove oil from the oil tank before tilting the machine head.**

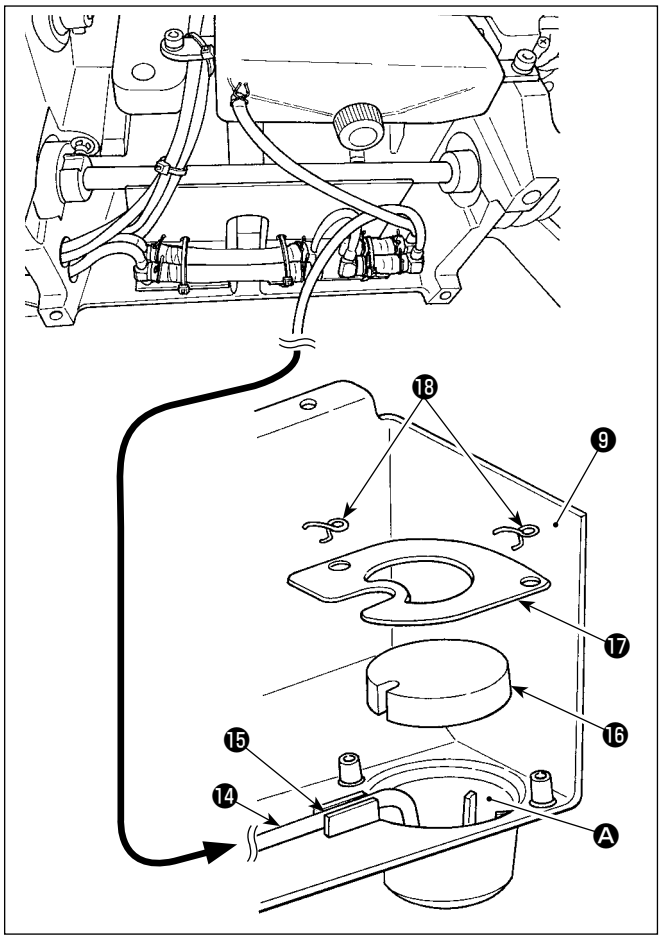

8) Put reflux pipe ⓮ in the oil reservoir Ⓐ of oil pan ❾ . Secure the pipe in groove ⓯ .

> **Caution**
> **Secure the reflux pipe ⓮ as illustrated in the figure.**

9) Fix filter ⓰ and filter clamp ⓱ with fitting ⓲ .

2-3. Installing the oil shield

> **WARNING :**
> **To protect against possible personal injury due to abrupt start of the machine, be sure to start the following work after turning the power off and ascertaining that the motor is at rest.**

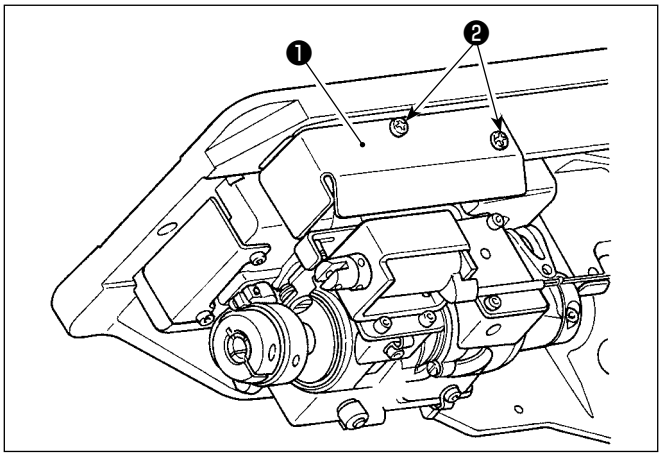

Install oil shield ❶ , supplied with the unit, on the frame with screws ❷ .

2-4. Pneumatic components (Only for the models provided with the stitch skipping detecting device and bobbin-thread remaining amount detecting device)

WARNING :
To protect against possible personal injury due to abrupt start of the machine, be sure to start the following work after turning the power off and ascertaining that the motor is at rest.

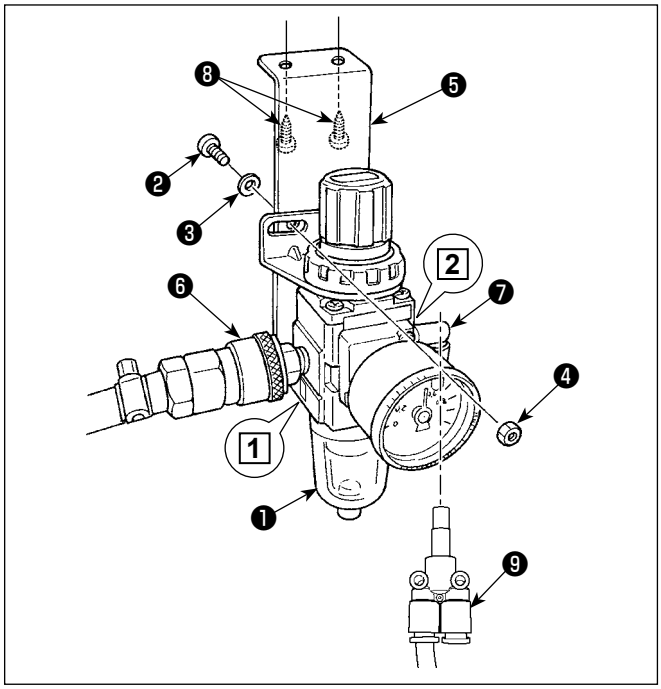

(1) Installing the regulator

1) Install regulator (asm.) ❶ on mounting plate ❺ with screw ❷ , spring washer ❸ and nut ❹ which are supplied with the unit.
2) Attach joint ❻ to inlet 1 . Attach joint ❼ to outlet 2 .
3) Attach mounting plate ❺ on the undersurface of the table with accessory screws ❽ supplied with the plate.
4) Connect branch Y union ❾ to joint ❼ .

* Screw ❷ which is supplied with the unit: Thread diameter M5; Length: 12 mm (SM6051202TP)

* Branch Y union ❾ (PJ308060004) which comes with the air blower solenoid valve asm._SD should be used.

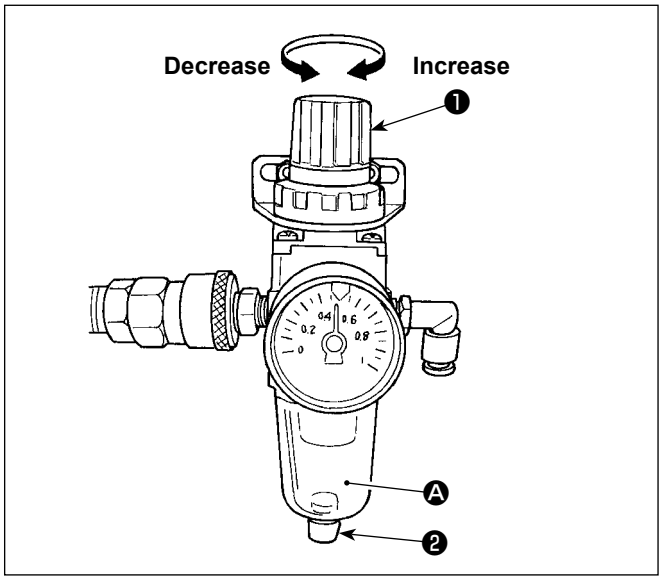

(2) Adjusting the air pressure

1) The operating air pressure is 0.5 to 0.55 MPa. Adjust the air pressure using air pressure regulating knob ❶ of the filter regulator.
2) In the case fluid accumulation is observed in Ⓐ section of the filter regulator, turn drain cock ❷ to drain the fluid.

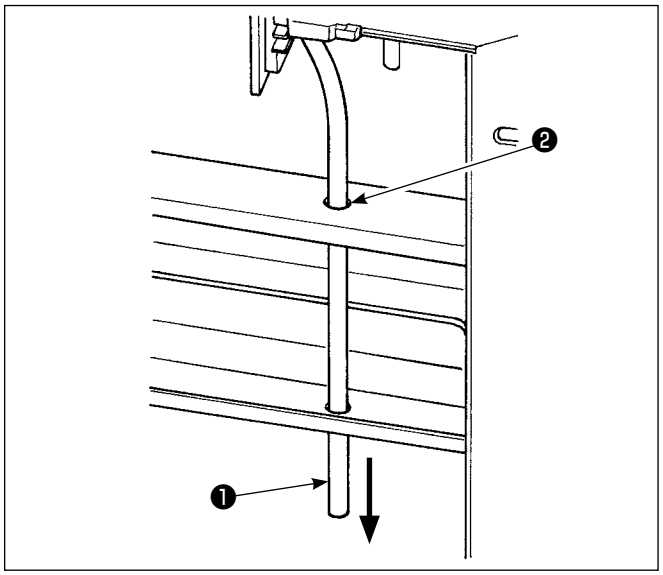

(3) Exhaust tube

Pass ø8 exhaust air tube ❶ through hole ❷ in the table stand and other relevant hole. Then, route the air tube downward. If the humidity is high, water may come out of the air tube.

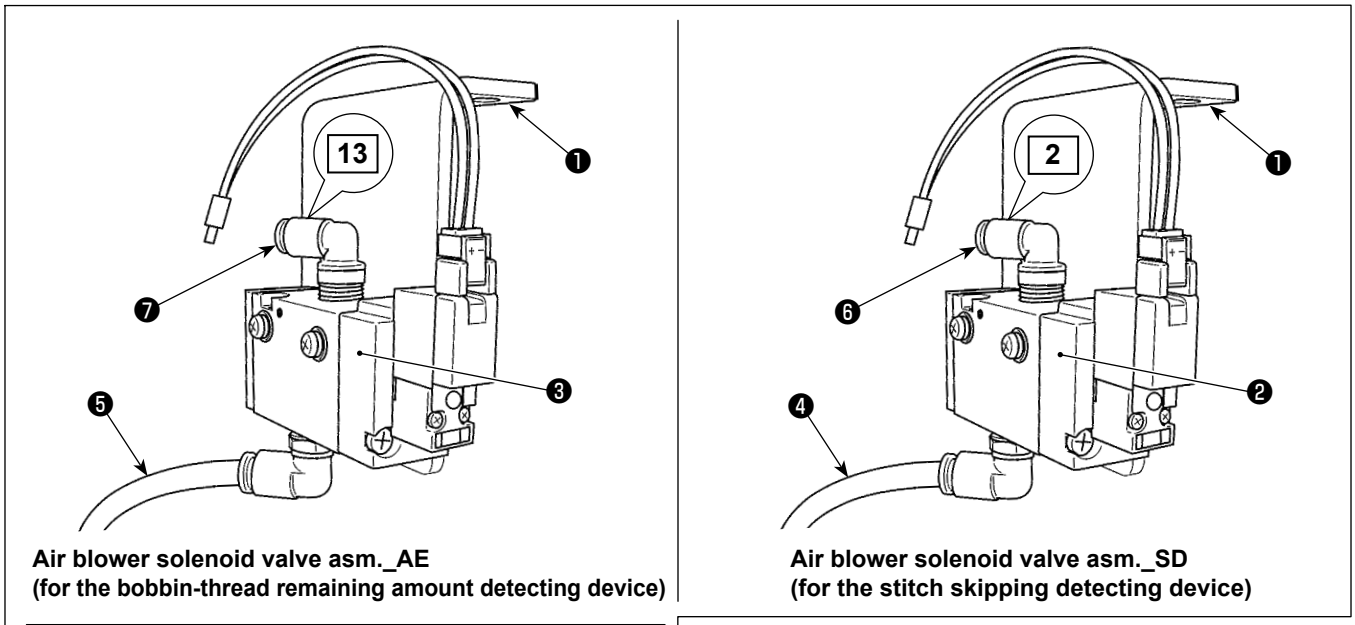

Air blower solenoid valve asm._AE
(for the bobbin-thread remaining amount detecting device)

Air blower solenoid valve asm._SD
(for the stitch skipping detecting device)

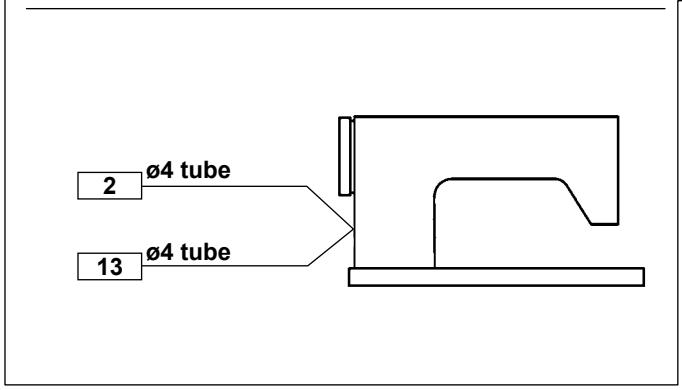

(4) Attaching the solenoid valve

1) Attach air blower solenoid valve asm._SD ❷ and air blower solenoid valve asm. _AE ❸ to the undersurface of table with accessory screws ❶ (SK3452001SE).
2) Connect ø6 tubes ❹ and ❺ to the branch Y union of regulator.
   Cut ø6 tubes ❹ and ❺ to an appropriate length before use.
3) Connect ø4 air tube (wire mark 2) coming from the stitch skipping detecting device to joint ❻ .
   Connect ø4 air tube (wire mark 13) coming from the bobbin-thread remaining amount detecting device to joint ❼ .

2-5. Installing the thread stand

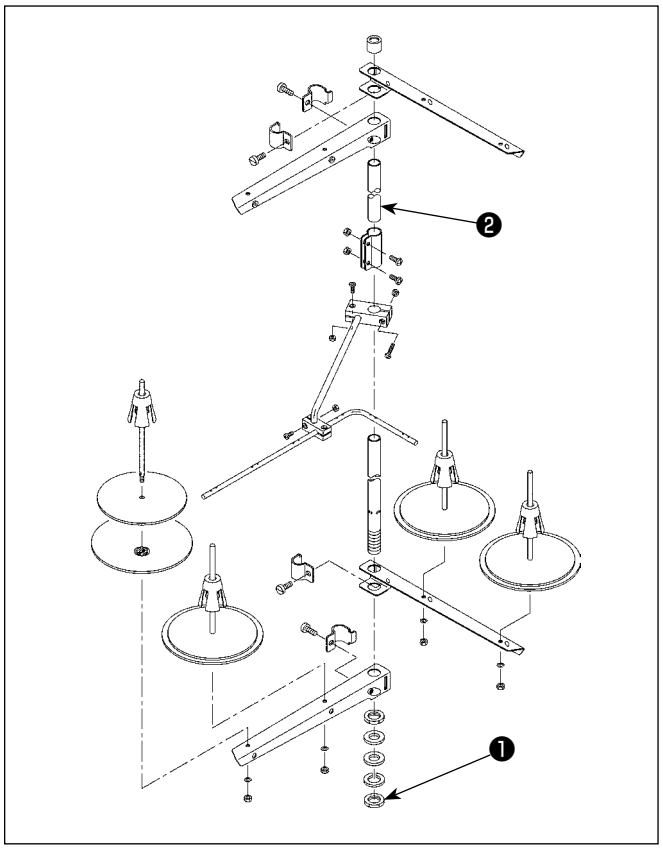

1) Assemble the thread stand unit, and insert it in the hole in the machine table.
2) Tighten nut ❶ .
3) For ceiling wiring, pass the power cord through spool rest rod ❷ .

2-6. Installing the thread guide pin

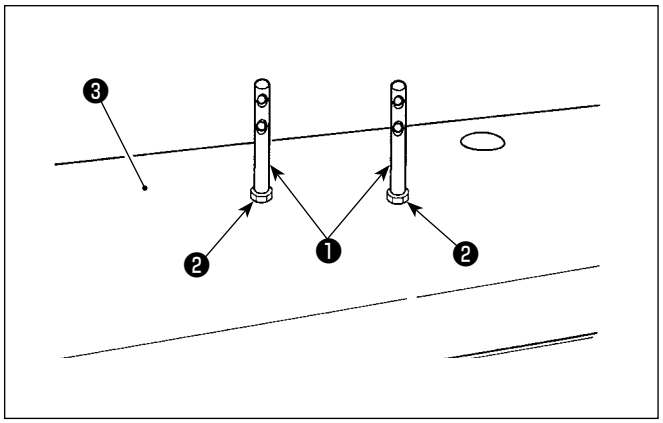

Fix needle thread guide pin ❶ on top cover ❸ with nut ❷ .

2-7. Installing the handwheel cover (only in the case the protection cover sensor is provided)

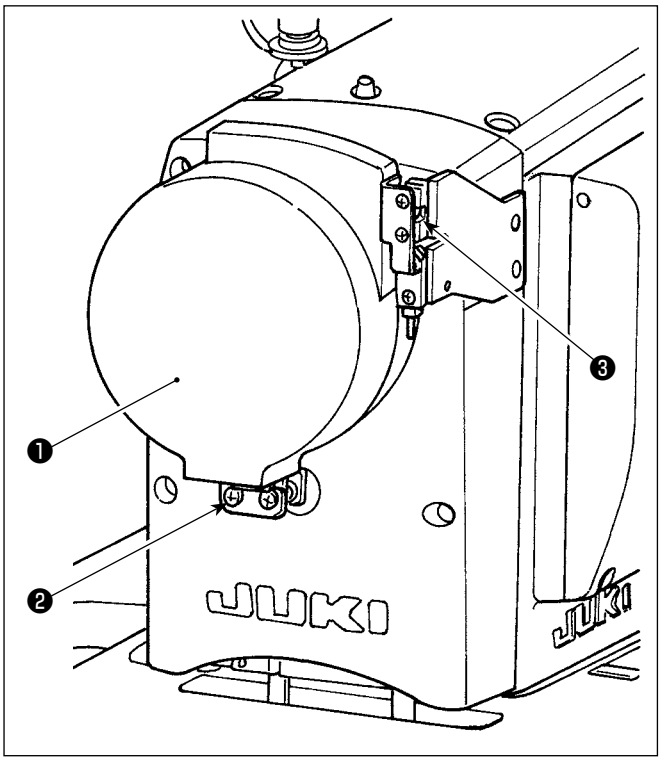

Fix handwheel cover ❶ with screw ❷ .

At this time, check the following:

- The handwheel cover smoothly fits into ball catch ❸ .
- The handwheel does not rub against handwheel cover ❶ .

If the handwheel rubs against the handwheel cover, loosen screw ❷ and adjust so that the former does not rub against the latter.

Check whether or not the handwheel rubs against the handwheel cover using the jog dial after the completion of sewing machine setup.

2-8. Installing the electrical box

2-8-1. Preparing for installation of the control box

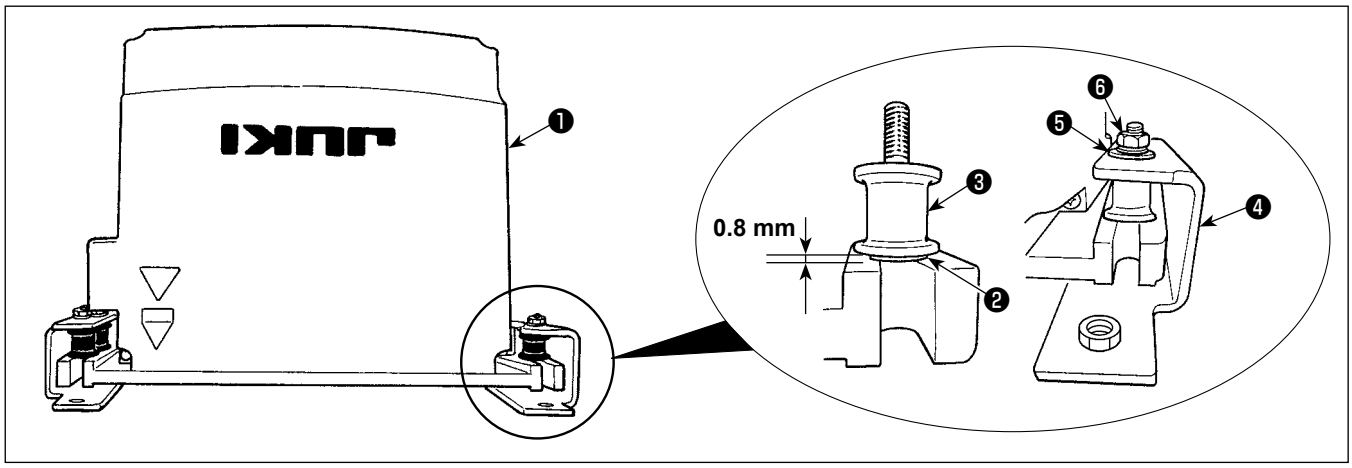

1) Secure toothed washer ❷ and vibration-proof rubber ❸ to control box ❶ . (At four locations)
   * Tighten the toothed washer until it protrudes the control box surface by 0.8 mm.
2) Secure control box mounting plate ❹ to the control box with plain washers ❺ and nuts ❻ . (At four locations)
   * Secure the mounting plate by fitting the screws against the U-groove in the mounting plate.

2-8-2. Installing the electrical box

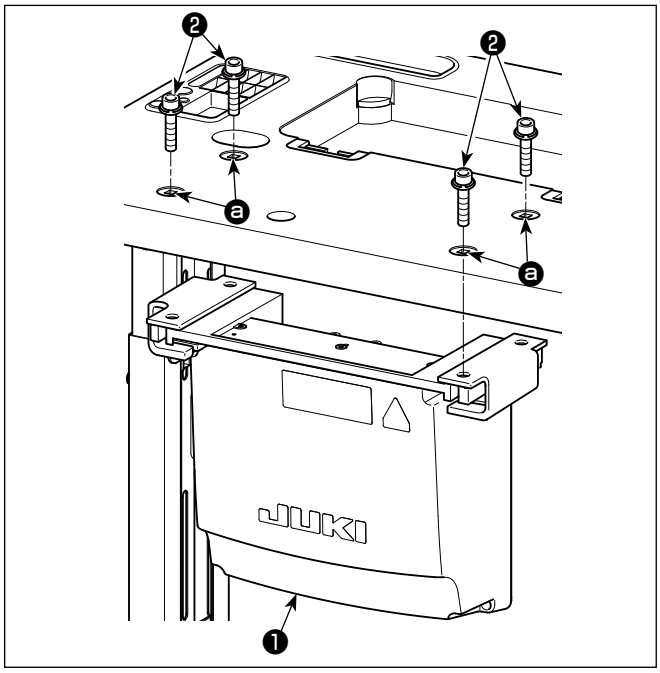

Install electrical box ❶ to the table by fixing four accessory bolts ❷ , which are supplied with the electrical box, in holes ⓐ in the table.

2-9. Installing the pedal sensor

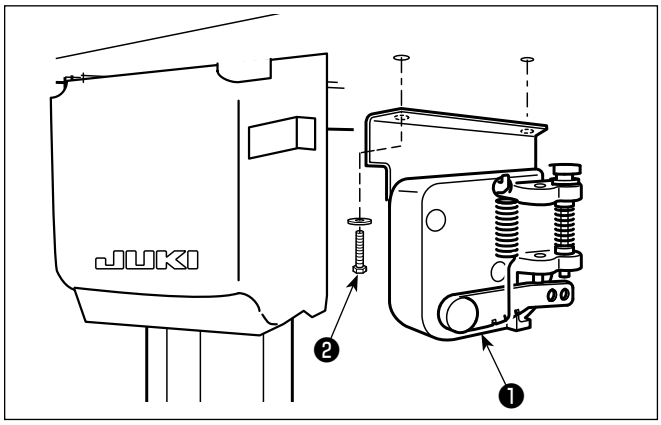

Secure pedal sensor ❶ to the table with two plain washers and two wood screws ❷ both of which are supplied with the electrical box.

2-10. Installing the reactor box (Only for the EU type models)

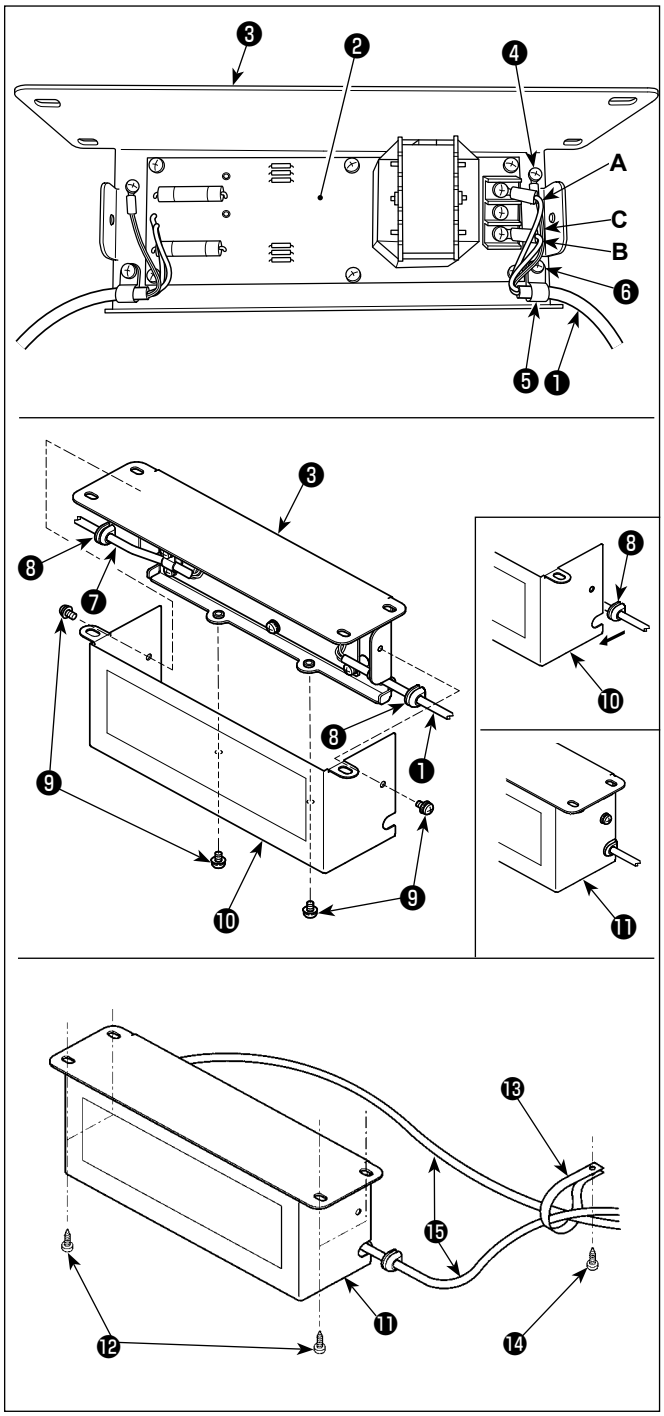

1) Connect the terminals of power cord ❶ of the SC-952 to reactor-box PCB asm. ❷ and to reactor box mounting plate ❸ .
Connect brown wire **A** to the first connector and blue wire **B** to the third connector respectively from the top of terminal block on the reactor box PCB asm. using screws. Connect green/yellow wire **C** to reactor box mounting plate ❸ with earth setscrew ❹ .
2) Attach cable clip ❺ to the power cord of SC-952. Attach the power cord together with the cable clip to reactor box mounting plate ❸ with cable clip setscrew ❻ .
3) Attach cord bushes ❽ to input/output cables ❶ and ❼ of the reactor box. Attach both bushes in the same manner.
4) Attach reactor box cover ❿ to reactor box mounting plate ❸ with four reactor-box cover setscrews ❾ .
At this time, fix cord bushes ❽ attached to input/output cables ❶ and ❼ in the concave section on reactor box cover ❿ to eliminate a gap between reactor box ⓫ and cover ❿ .
5) Secure reactor box ⓫ to the undersurface of table with four accessory wood screws ⓬ .
6) Secure two cables ⓯ coming from reactor box ⓫ to the table with accessory cable clip ⓭ and wood screw ⓮ .
In addition, for the models provided with the stitch skipping detecting device and the bobbin-thread remaining amount detecting device, cables coming from the stitch skipping device control box should be secured together with the aforementioned cables by means of the aforementioned cable clip.

2-11. Installing the control box for stitch skipping detecting device (only for the models provided with the stitch skipping detecting device and the bobbin-thread remaining amount detecting device)

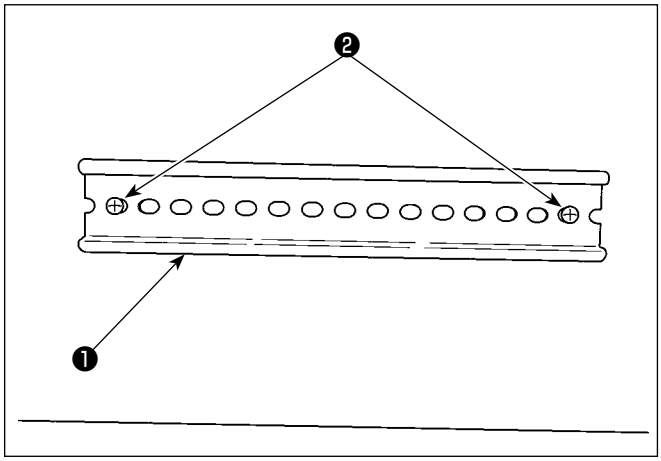

1) Fix DIN rail ❶ supplied with the sewing machine on the undersurface of table with two wood screws ❷ .

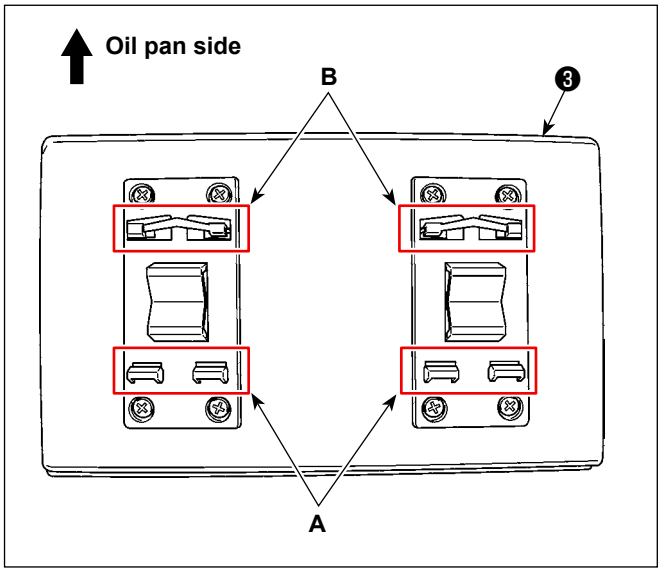

2) Attach control box ❸ for the stitch skipping detecting device to DIN rail ❶ while orienting it in the direction as illustrated in the figure. Fix section **A** of stitch skipping detecting device control box ❸ in DIN rail ❶ . Fit section **B** in DIN rail ❶ while pressing section **A** against DIN rail ❶ .

2-12. Installing the accessory ring core (Only for the EU type models)

2-12-1. Installing the accessory ring core supplied with the electrical box

Refer to accessory manual for "SC-952 Installing the accessory ring core" supplied with the electrical box for how to install the ring core.

2-12-2. Installing the accessory ring core supplied with the sewing machine (only for the optional category F type)

For the EU type models and other models classified into category F, the ring core is included in the accessories. Attach the ring core to the cord together with **"2-14. Connecting the cords" p.16** referring to the figure given below.

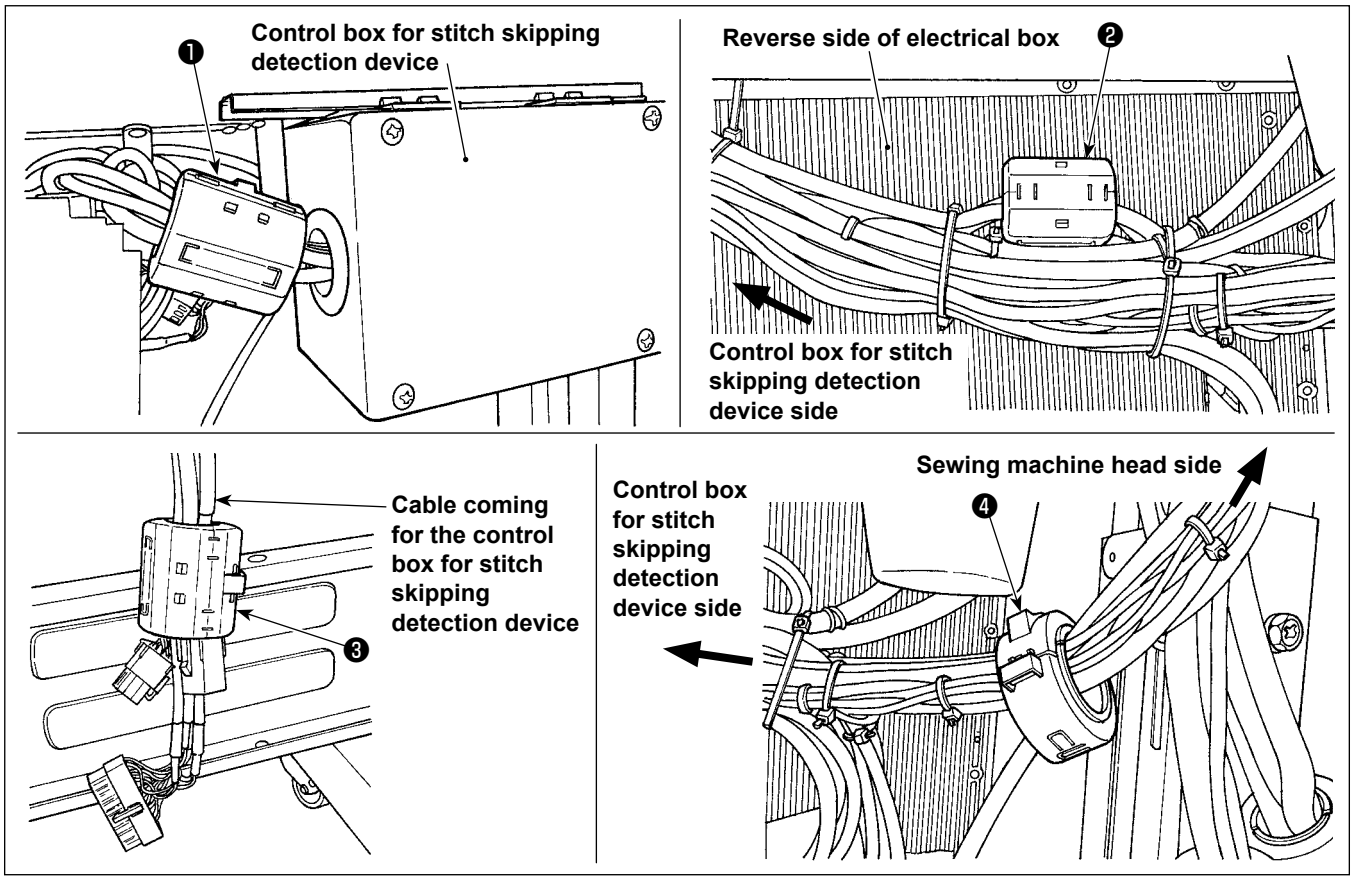

Ring core number	Target cable *3	Core size (mm)
❶ *1	The cable to CN1 The cable to CN2 The cable to CN3 The cable to CN8 The cable to CN9	ø40
❷ *1	The cable to CN30 (Male connector) The cable to CN30 (Female connector)	ø31.7
❸ *1	The cable to CN30 (Male connector) The cable to CN30 (Female connector) The cable to CN51	ø40
❹ *2	The cable to CN58 Protective cover sensor cable The cable to CN8 The cable to CN9	ø44

***1 Clamp cores ❶ , ❷ and ❸ after mounting "2-14-2. Connection of the cords coming from the stitch skipping detecting device, bobbin-thread remaining amount detecting device and cover sensor" p.17.**

***2 Clamp core ❹ after mounting "2-15-2. Handling the cords coming from the control box for stitch skipping detecting device" p.20.**

***3 Cables other than the protective cover sensor cable come from the control box for stitch skipping detection device.**

2-13. Connecting the power switch cable

2-13-1. Installing the power switch

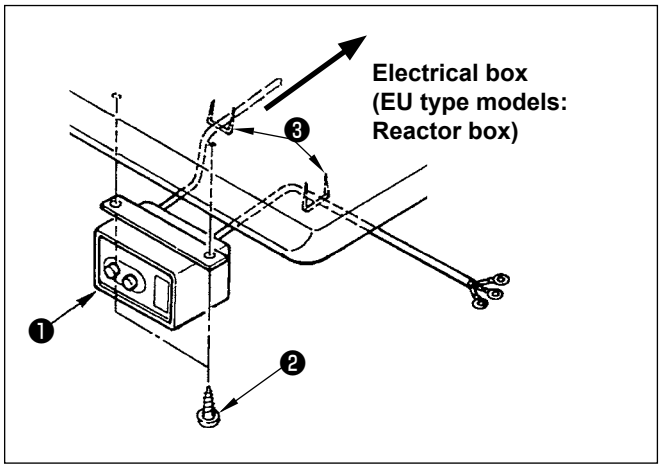

Fix power switch ❶ under the machine table with wood screws ❷ .

Fix the cable with staples ❸ supplied with the machine as accessories in accordance with the forms of use.

2-13-2. Connecting the power source cord

Voltage specifications at the time of delivery from the factory are indicated on the voltage indication seal. Connect the cord in accordance with the specifications.

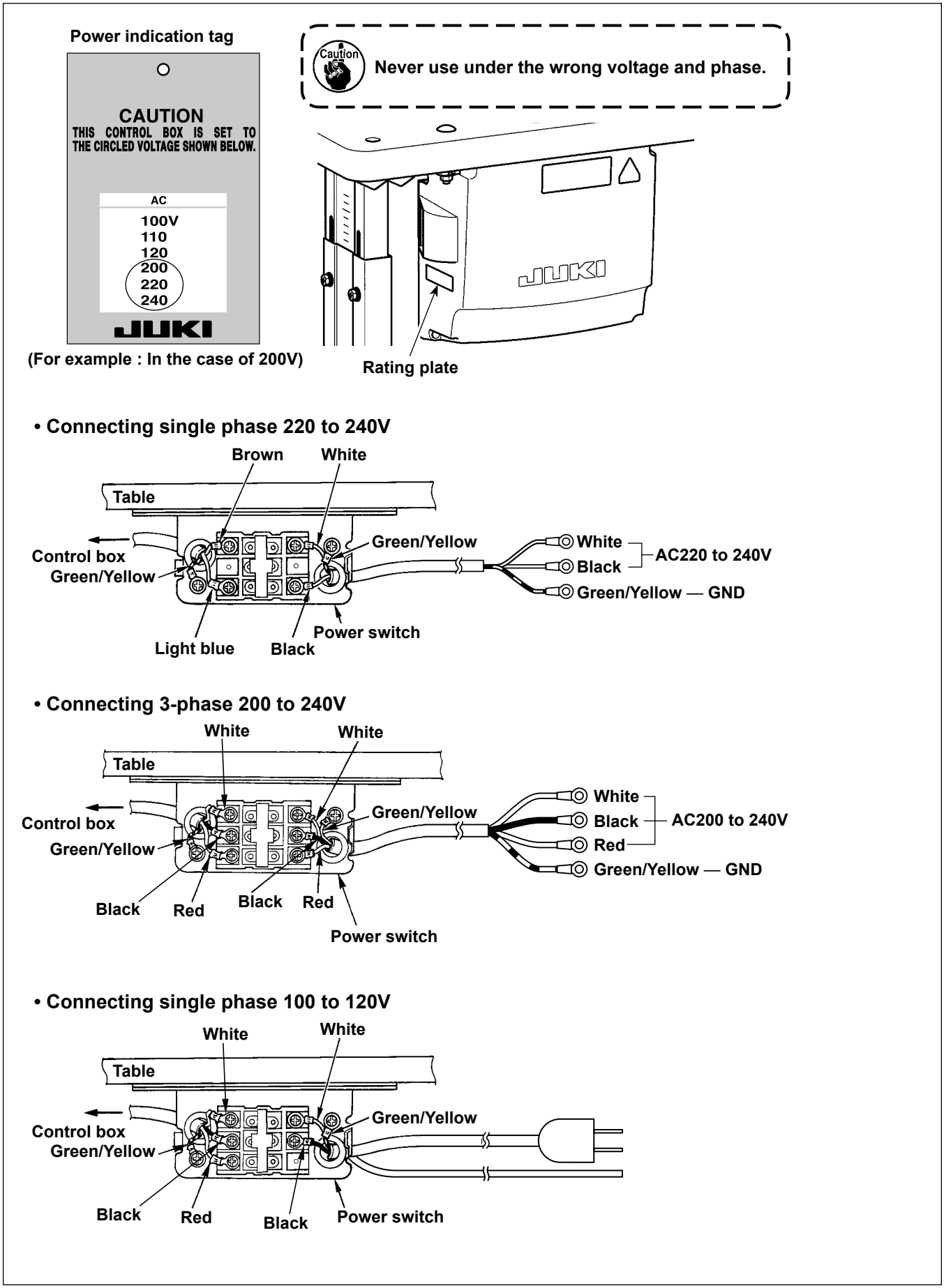

2-14. Connecting the cords

DANGER :

1. **To prevent personal injuries caused by electric shock hazards or abrupt start of the sewing machine, carry out the work after turning OFF the power switch and a lapse of 5 minutes or more.**
2. **To prevent accidents caused by unaccustomed work or electric shock, request the electric expert or engineer of our dealers when adjusting the electrical components.**

2-14-1. Connecting the cords coming from the sewing machine

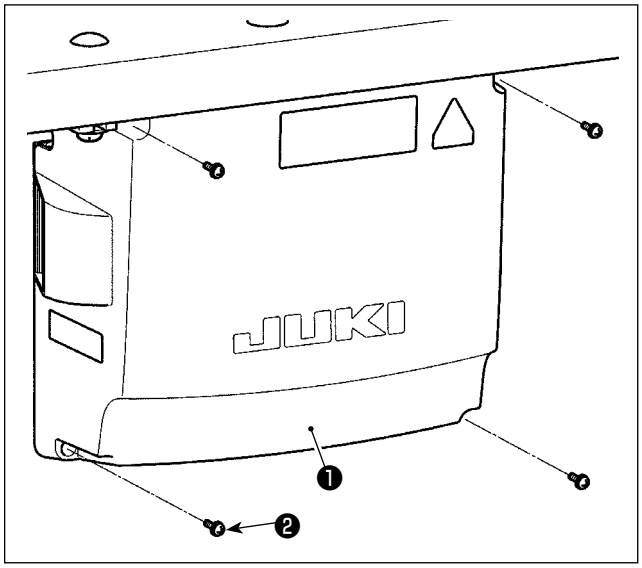

1) Loosen four setscrews ❷ of control box cover ❶. Remove control box cover ❶ .
2) Connect the cords to the respective connectors on CTL PWB, PWR PWB. (Fig. 1)
   Secure cord ❺ of pedal sensor with setscrew ❻ and cord clamp ❼ . (Fig. 2)

Caution
Securely fix the cords to be connected to CN20, CN21 and CN22 with cable clamp ❸ . Check the connector markers of CN21 and CN22 to prevent improper connection.

3) Fix green/yellow ground wire ❹ at position Ⓐ of the control box with a screw (Fig. 3). In addition, for the EU type models, fix the cable (Black) at screw Ⓑ with a screw.

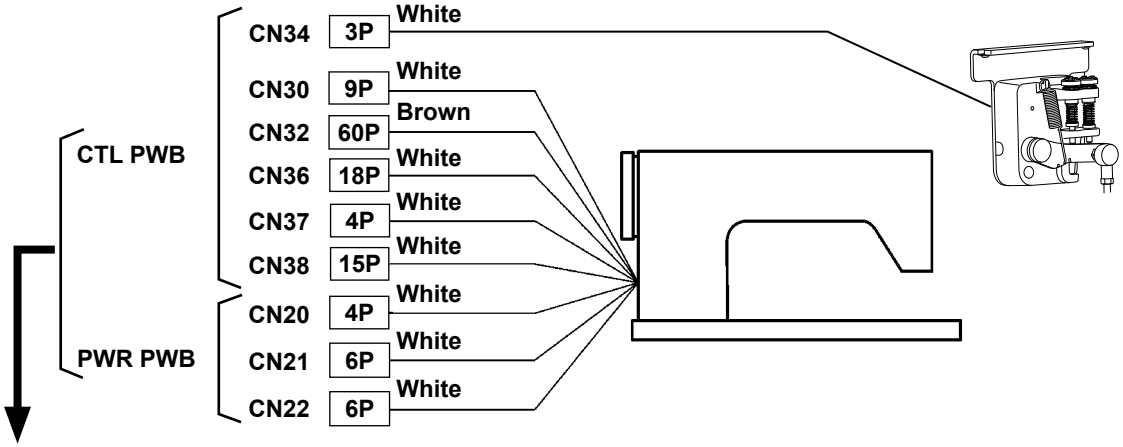

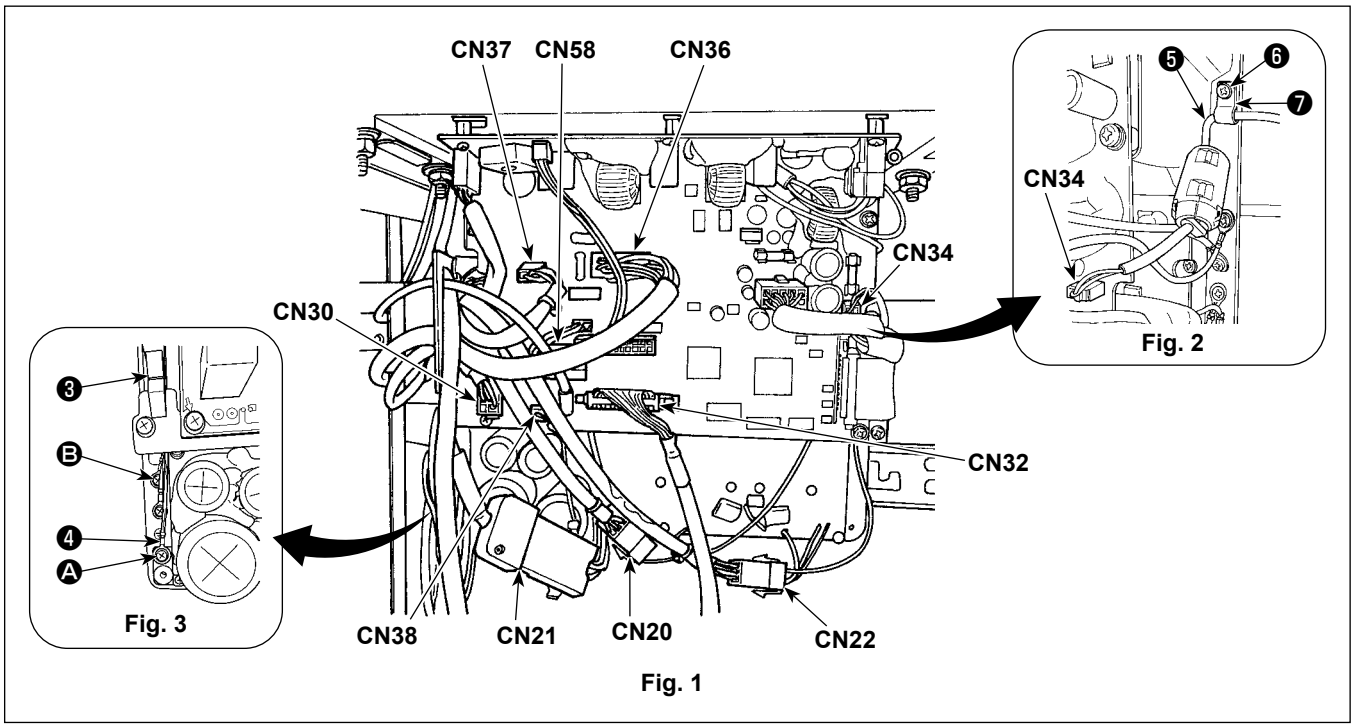

Fig. 1

2-14-2. Connection of the cords coming from the stitch skipping detecting device, bobbin-thread remaining amount detecting device and cover sensor

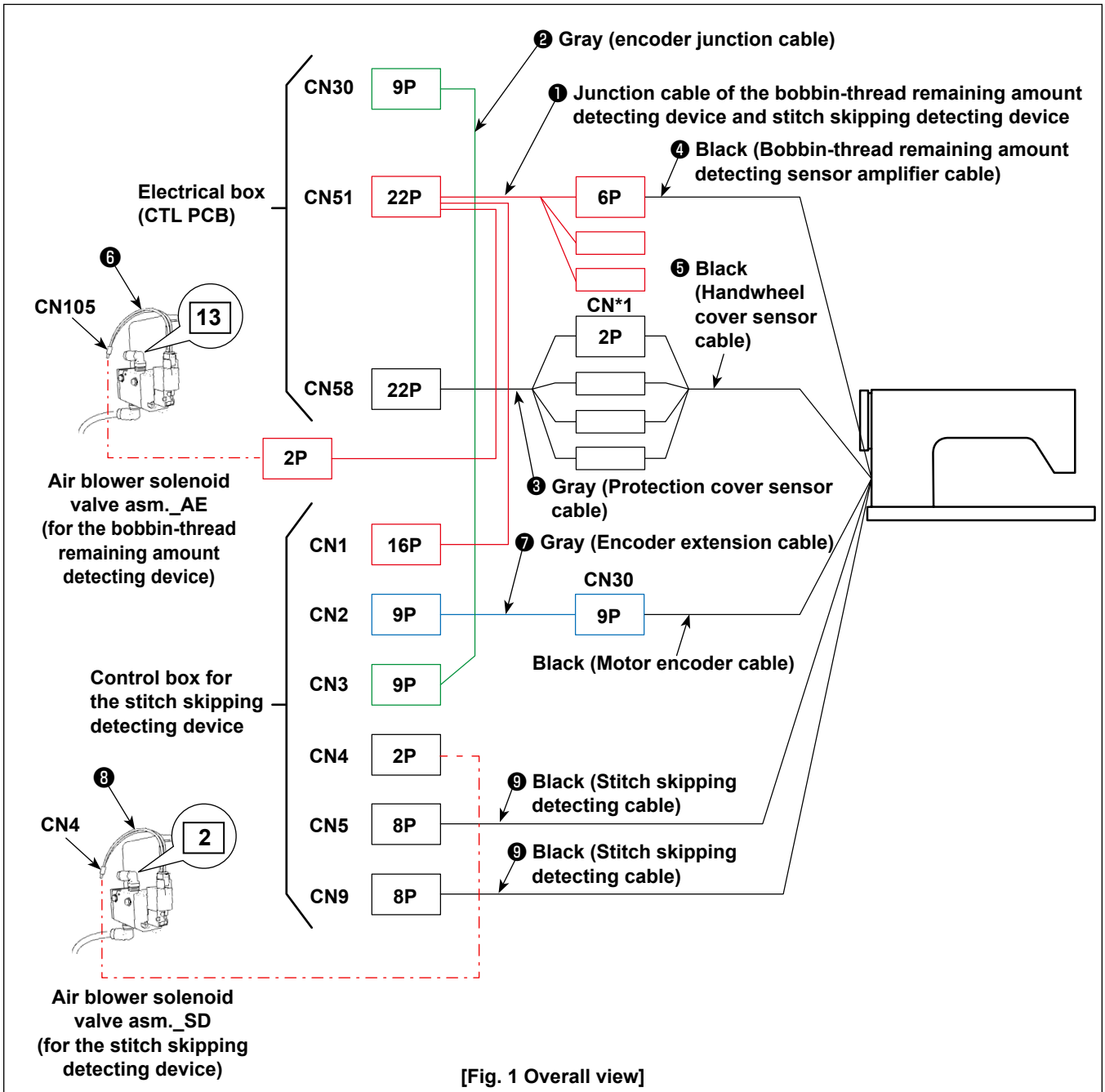

[Fig. 1 Overall view]

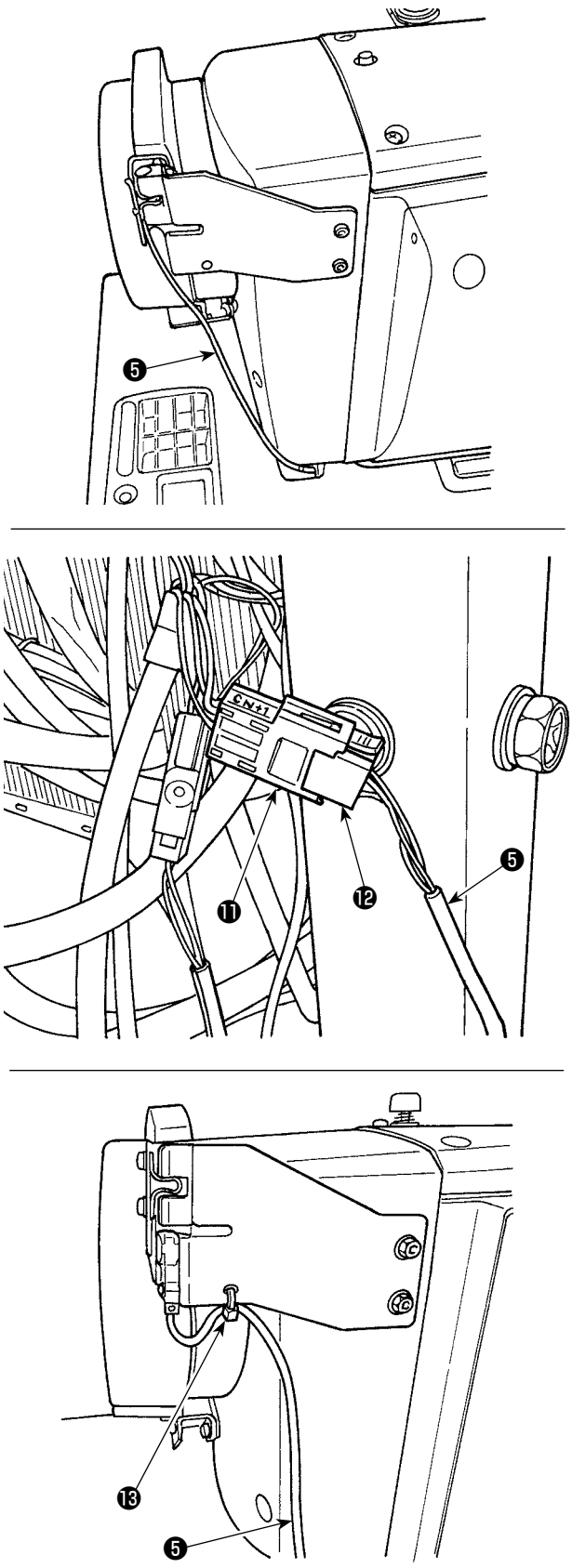

[Fig. 2 Handwheel cover sensor]

[Wiring the handwheel cover sensor cord]

Connect the connectors in the following order referring to Figs. 1 and 2.

1) Pass handwheel cover sensor cord ❺ through the hole in table.

2) Connect the connector CN*1 ⓫ of protective cover sensor cable ❸ to the connector ⓬ of handwheel cover sensor cord ❺ .

3) Secure handwheel cover sensor cord ❺ to the handwheel cover with a cable clip band ⓭ . Refer to **"2-15-2. Handling the cords coming from the control box for stitch skipping detecting device" p.20** for how to handle the excess cord.

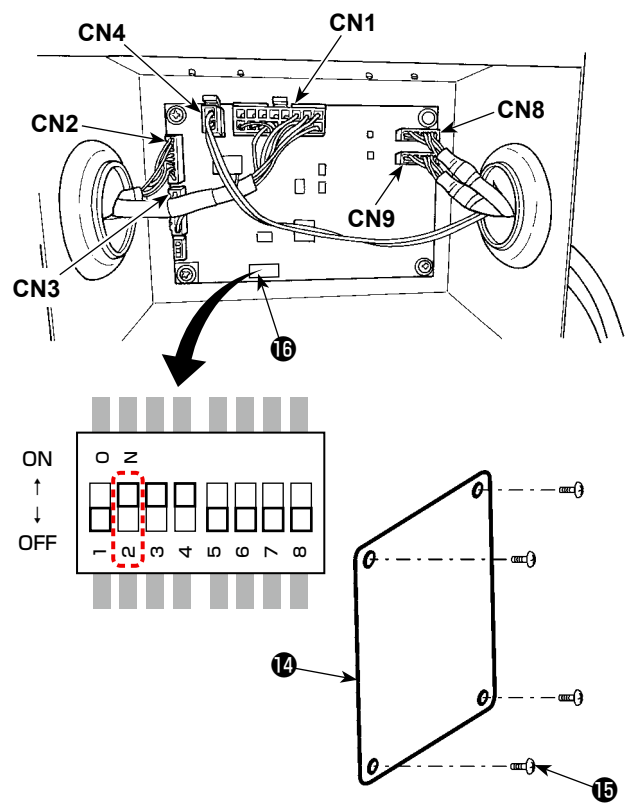

[Fig. 3 Control box]

[Wiring of the control box for stitch skipping detecting device]

Connect the connectors in the following order referring to Figs. 1 and 3.

Caution **The connectors cannot be connected unless the correct order is followed.**

1) Place DIP switch 2 ⓰ on the control box in ON.
2) Connect solenoid valve cable ❽ of the air blower solenoid valve_SD to the CN4.
3) Connect the 16P connector of the junction cable ❶ of the bobbin-thread remaining amount detecting device and stitch skipping detecting device to the CN1.
4) Connect encoder junction cable asm. ❷ to the CN3.
5) Connect encoder extension cable asm. ❼ to the CN2.
6) Connect the stitch skipping detecting device cable ❾ to the CN8. Put the excess of the cable in the control box.
7) Connect the stitch skipping detecting device cable ❿ to the CN9. Put the excess of the cable in the control box.
8) After the completion of connection of all connectors, close cover ⓮ with screw ⓯ .

*** Connect the cables to the CN1, CN2 and CN3 while inserting the former through the hole in the left surface of control box. Connect the cables to the CN4 and CN8 while inserting the former through the hole in the right surface of control box.**

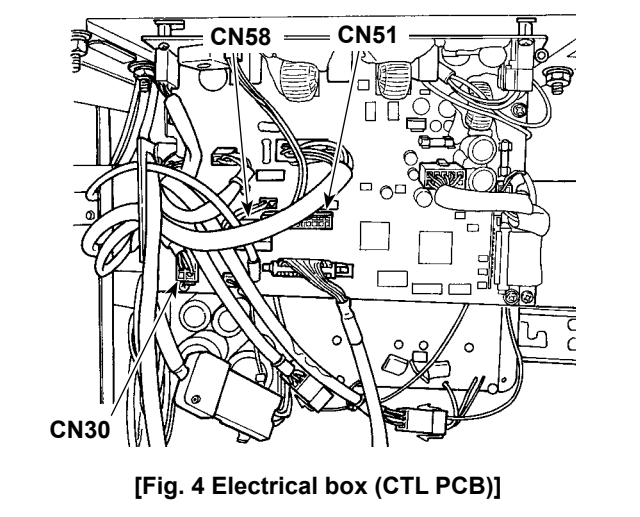

[Fig. 4 Electrical box (CTL PCB)]

[Wiring of the electrical box (CTL PCB)]

Connect the connectors in the following order referring to Figs. 1 and 4.

1) Connect the 22P connector of the junction cable ❶ of bobbin-thread remaining amount detecting device and stitch skipping detecting device to the CN51.
2) Pull out the connector (motor encoder connector coming from the sewing machine) from the CN30. Connect encoder extension cable ❼ to the cable you have pulled out.
3) Connect encoder junction cable ❷ to the CN30 on PCB side.
4) Connect protection cover sensor cable ❸ to the CN58.
5) Connect the bobbin-thread remaining amount detecting device sensor amplifier cable ❹ to the 6P connector of junction cable ❶ of the bobbin-thread remaining amount detecting device and stitch skipping detecting device.
6) Connect solenoid valve cable ❻ of the air blower solenoid valve asm_AE to the 2P connector of junction cable ❶ of the bobbin-thread remaining amount detecting device and stitch skipping detecting device.

2-15 Handling the cords

DANGER :

1. **To prevent personal injuries caused by electric shock hazards or abrupt start of the sewing machine, carry out the work after turning OFF the power switch and a lapse of 5 minutes or more.**
2. **To prevent accidents caused by unaccustomed work or electric shock, request the electric expert or engineer of our dealers when adjusting the electrical components.**

2-15-1. Handling the cords coming from the control box

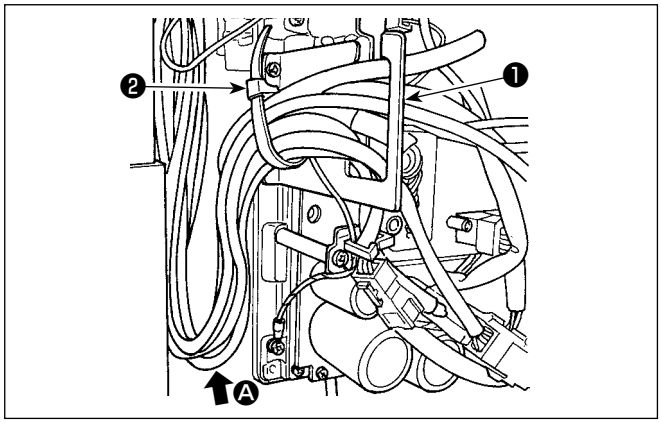

1) Bring the cords under the table into the control box.
2) Put the cord brought into the control box through cord exit plate ❶ and fix cable clip band ❷ .

Arrange the cord so that it is not tensed or hitched even when the machine head is tilted. (See Ⓐ section.)

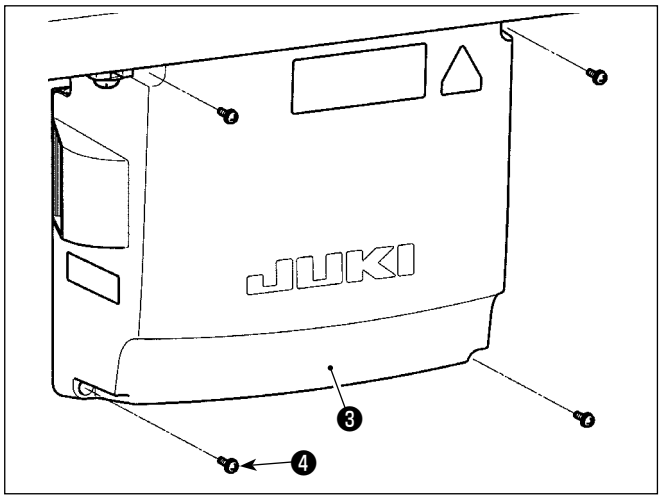

3) Install control box cover ❸ with four setscrews ❹ .

For the purpose of preventing the cord breakage, take care not to allow the cords to be caught between the control box and control box cover ❸ when attaching the latter.

2-15-2. Handling the cords coming from the control box for stitch skipping detecting device

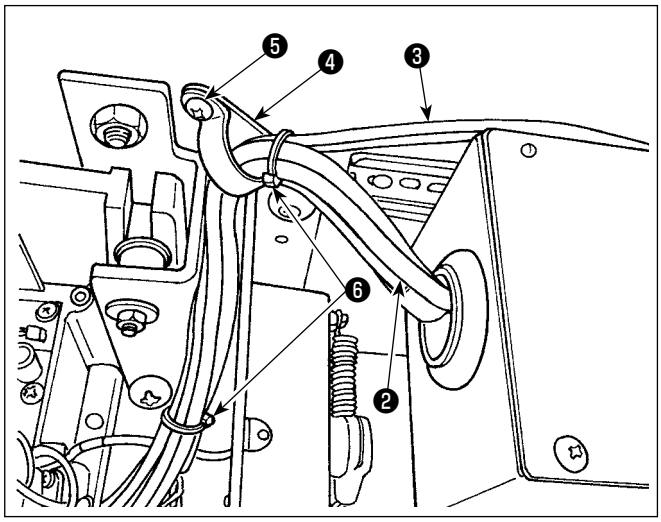

1) Fix cord ❷ coming from control box ❶ for the stitch skipping detecting device and tube ❸ coming from the solenoid valve to the table with accessory cable clip ❹ and wood screw ❺ as illustrated in the figure.
   In addition, fasten cord ❷ and tube ❸ with accessory two 10 mm long cable clip bands ❻ as illustrated in the figure.

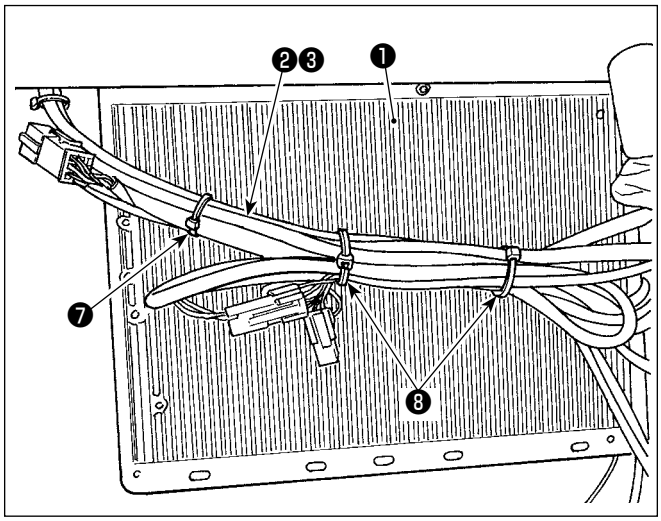

2) Bundle cord ❷ coming from the control box for stitch skipping detecting device and tube ❸ coming from the solenoid valve on the under-surface of electrical box ❶ .
Fix the cord and tube which are bundled in the above step 2) with accessory 10 mm long cable clip band ❼ and two 15 mm long cable clip bands ❽ as illustrated in the figure.
At this time, fold the longer cord to an appropriate length and bundle the folded cord so that it does not sag.

2-16. Attaching the connecting rod

WARNING :
To protect against possible personal injury due to abrupt start of the machine, be sure to start the following work after turning the power off and a lapse of 5 minutes or more.

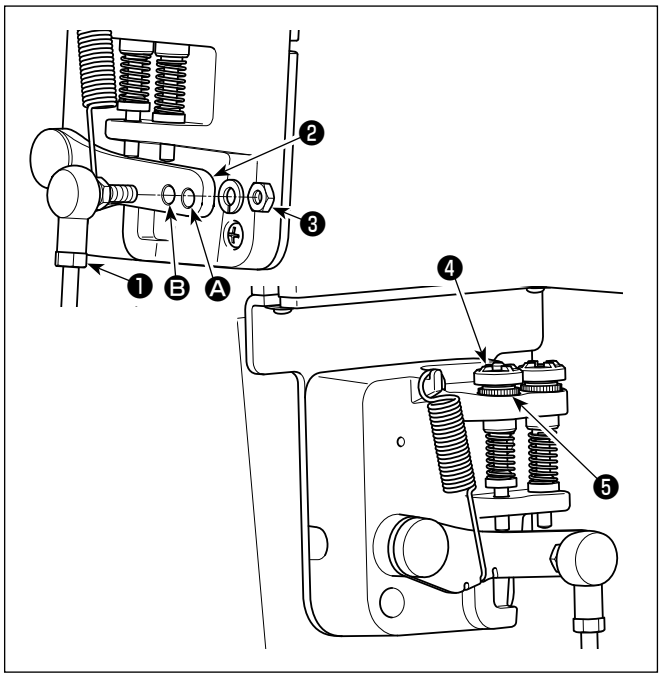

1) Fix connecting rod ❶ to installing hole Ⓑ of pedal lever ❷ with nut ❸ .
2) Installing connecting rod ❶ to installing hole Ⓐ will lengthen the pedal depressing stroke, and the pedal operation at a medium speed will be easier.
3) The pressure increases as you turn reverse depressing regulator screw ❹ in, and decreases as you turn the screw out.

Caution
1. **If the screw is excessively loosened, the spring will come off. Loosen the screw to such an extent that the top of the screw can be observed from the case.**
2. **Whenever you have adjusted the screw, be sure to secure the screw by tightening metal nut ❺ to prevent the screw from loosening.**

2-17. Adjustment of the pedal

WARNING :
Turn OFF the power before starting the work so as to prevent accidents caused by abrupt start of the sewing machine.

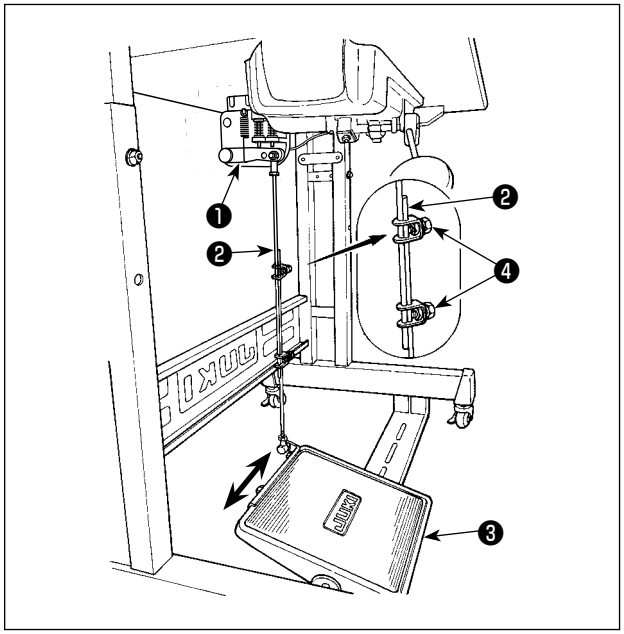

2-17-1. Installing the connecting rod

1) Move pedal ❸ to the right or left as illustrated by the arrows so that motor control lever ❶ and connecting rod ❷ are straightened.

2-17-2. Adjusting the pedal angle

1) The pedal tilt can be freely adjusted by changing the length of the connecting rod ❷ .
2) Loosen adjust screw ❹ , and adjust the length of connecting rod ❷ .

2-18. Pedal operation

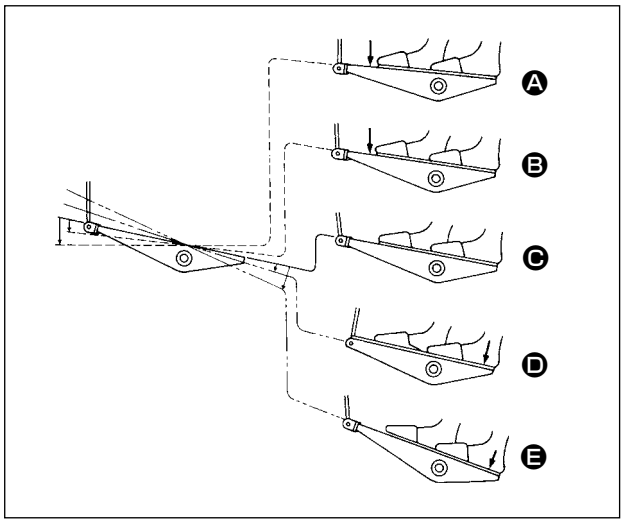

The pedal is operated in five steps.

1) The machine runs at low sewing speed when you lightly depress the front part of the pedal. Ⓑ
2) The machine runs at high sewing speed when you further depress the front part of the pedal. Ⓐ (If the automatic reverse feed stitching has been preset, the machine runs at high speed after it completes reverse feed stitching.)
3) The machine stops (with its needle up or down) when you reset the pedal to its original position. Ⓒ
4) Presser lifting operation Ⓓ is performed by lightly depressing the back part of pedal.
5) Thread trimming operation Ⓔ is performed by further depressing the back part of pedal.

- When starting sewing from the state that the presser foot has been lifted with the Auto-lifter and you depress the back part of the pedal, the presser foot only comes down.
- If you reset the pedal to its neutral position during the automatic reverse feed stitching at seam start, the machine stops after it completes the reverse feed stitching.
- The machine will perform normal thread trimming even if you depress the back part of the pedal immediately following high or low speed sewing.
- The machine will completely perform thread trimming even if you reset the pedal to its neutral position immediately after the machine started thread trimming action.

2-19. Lubrication

WARNING :

1. **Do not connect the power plug until the lubrication has been completed so as to prevent accidents due to abrupt start of the sewing machine.**
2. **To prevent the occurrence of an inflammation or rash, immediately wash the related portions if oil adheres to your eyes or other parts of your body.**
3. **If oil is mistakenly swallowed, diarrhea or vomitting may occur. Put oil in a place where children cannot reach.**

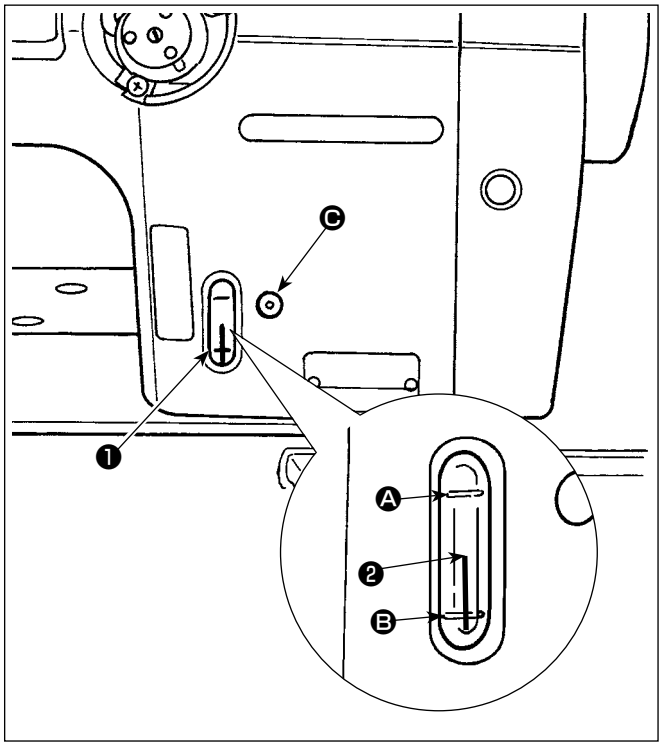

■ Lubrication procedure

Fill the oil tank with oil before operating the sewing machine.

1) Fill the oil tank with JUKI NEW DEFRIX OIL No.1 (Part No. : MDFRX1600C0) or JUKI MACHINE OIL #7 (Part No. : MML007600CA) using the oiler supplied with the machine from section ❍.
2) Fill the oil tank with the oil until the top end of oil amount indicating rod ❷ comes between the upper engraved marker line Ⓐ and the lower engraved marker line Ⓑ of oil amount indicating window ❶ .
   If the oil is filled excessively, it will leak from the air vent hole in the oil tank or proper lubrication will be not performed. In addition, when the oil is vigorously filled, it may overflow from the oil hole. So, be careful.
3) When you operate the sewing machine, refill oil if the top end of oil amount indicating rod ❷ comes down to the lower engraved marker line Ⓑ of oil amount indicating window ❶ .

1. When using a new sewing machine for the first time or using the sewing machine which has not been used for a long time, run in the sewing machine at a sewing speed of 1,000 sti/min or less and check the oil quantity in the hook before use.
In the case the oil does not come from the hook, turn the oil amount adjusting screw counterclockwise to make sure that the oil is fed from the hook. After that, adjust the amount of the oil fed from the hook appropriately. (Refer to "4-12. Adjusting the oil quantity in the hook" p.44)
2. For the oil for hook lubrication, purchase JUKI NEW DEFRIX OIL No. 1 (Part No. : MDFRX1600C0) or JUKI MACHINE OIL #7 (Part No. : MML007600CA).
3. Be sure to lubricate clean oil.

2-20. How to use the operation panel (Basic explanation)

2-20-1. Selection of the language (operation to be done at first)

Select the language to be displayed on the operation panel when you turn ON the power to your sewing machine for the first time after the purchase. Note that, if you turn the power OFF without selecting the language, the language selection screen will be displayed every time you turn ON the power to the sewing machine.

① Turning ON the power switch

Caution

Be aware that the needle bar may move automatically, according to the settings of the sewing machine, when the power is turned ON. The needle bar can also be set so that it does not move automatically. Refer to "6-5. List of memory switch data" p. 91 for details.

<Welcome screen>

Firstly, the welcome screen is displayed on the panel. Then, the language selection screen is displayed.

② Selecting the language

<Language selection screen>

Select the language you want to use and press corresponding language button ❶ . Then, press ❷ .

This determines the language to be displayed on the panel.

The language to be displayed on the operation panel can be changed using the memory switch U406. Refer to **"6-5. List of memory switch data" p. 91** for details.

③ Retrieval of the origin

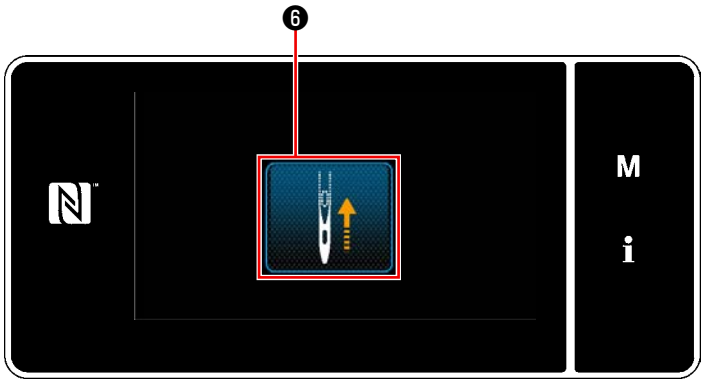

<Origin retrieval screen>

Press ❻ to bring the origin retrieval needle bar to its upper position.

* In the case "U090 Initial operation upper position stop function" is set to "1", the screen shown on the left is not displayed, but the needle bar automatically goes up to its upper position.

④ Setting the clock

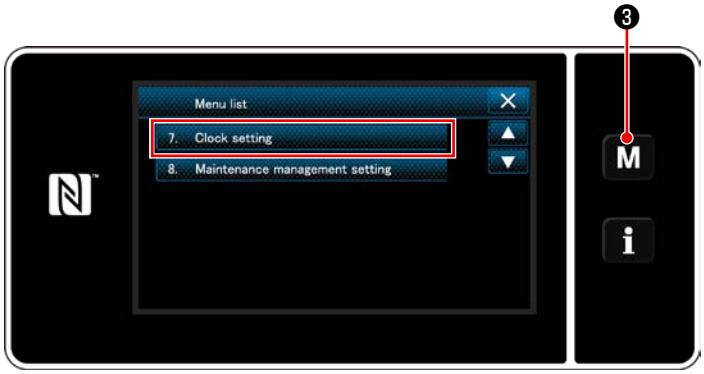

<Mode screen>

1) Press M ❸ .

   The "mode screen" is displayed.

2) Select the "7. Clock setting".

   The "clock setting screen" is displayed.

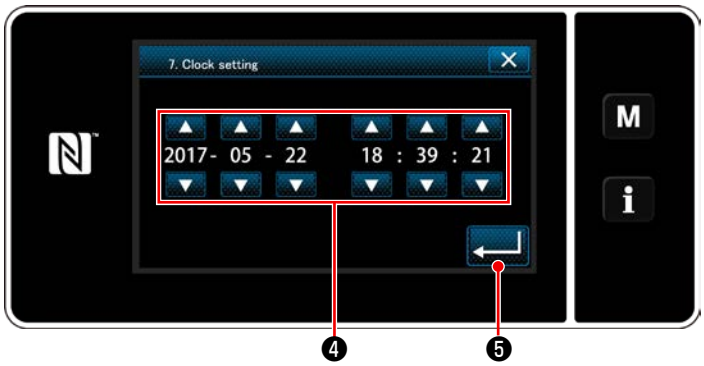

<Clock setting screen>

3) Enter year/month/day/hour/minute/second with ❹ .

   The time entered is displayed in 24-hour notation.

4) Press ❺ to confirm the clock setting.

   Then, the current screen returns to the previous screen.

2-20-2. Names and functions of the panel keys

* Changeover between the operator mode and the maintenance personnel mode is carried out by pressing M ❶ and i ❷ simultaneously.

<Operator mode>

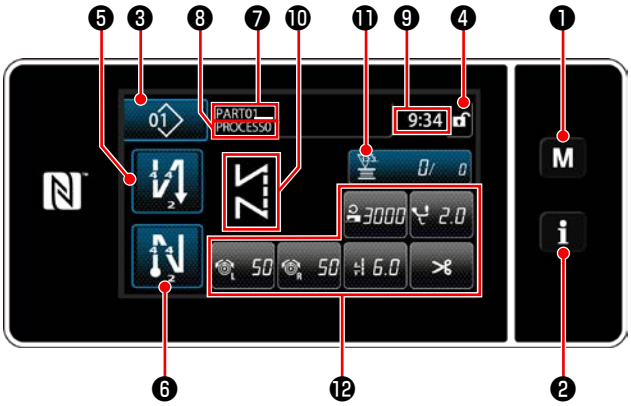

<Maintenance personnel mode>

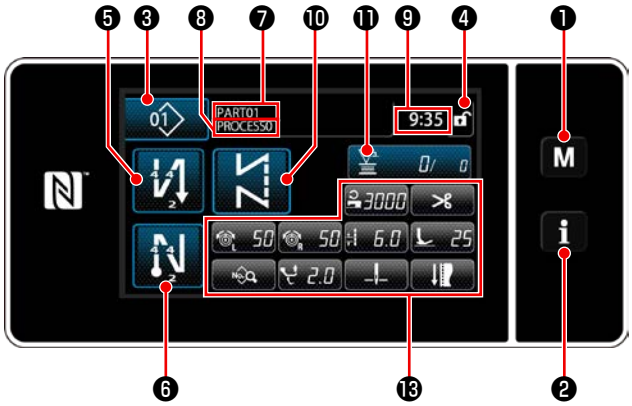

	Switch/display	Description
❶	Mode key	This switch is used for displaying the menu screen.
❷	Information key	This switch is used for displaying the information screen.
❸	Sewing pattern No. button	This switch is used for displaying the number of the sewing pattern.
❹	Simplified screen lock button	This button is used for displaying the simplified lock status of the screen on it. Locked: Unlocked:
❺	Sewing-start reverse-feed stitch button	This switch is used for changing the ON/OFF status of the reverse feed stitching at the beginning of sewing. When reverse feed stitching at the beginning of sewing is placed in the OFF state, mark is displayed at the upper left of the button.
❻	Sewing-end reverse-feed stitch button	This switch is used for changing the ON/OFF status of reverse feed stitching at the end of sewing. When reverse feed stitching at the end of sewing is placed in the OFF state, mark is displayed at the upper left of the button.
❼	Part number	In the case the part number/process display is selected with U404, the part number is displayed. In the case the comment display is selected, the comment is displayed.
❽	Process/comment	In the case the part number/process display is selected with U404, the process is displayed. In the case the comment display is selected, the comment is displayed.
❾	Clock display	The time set on the sewing machine is displayed in this field in 24-hour system.
❿	Sewing pattern display	The selected sewing pattern is displayed in this field.
⓫	Customization button 1	A selected function can be allocated to and registered with this button. Initially, the sewing counter has been factory-allocate and -registered.
⓬	Customization buttons 2 - 7	A selected function can be allocated to and registered with this button.
⓭	Customization buttons 2 - 11	A selected function can be allocated to and registered with this button.

*** Confirmation of data**

To change the pattern number, select the pattern you want to use first.

Then, confirm your selection by pressing .

For the setting items of the Memory switch or sewing pattern, change the target data and press to confirm the change.

After the setting data on the number of stitches of reverse-feed stitching or the number of stitches of multi-layer stitching has been changed, the changed setting data is confirmed by pressing .

2-20-3. Basic operation

① Turning ON the power switch

When you turn ON the power switch, the welcome screen is displayed.

② Selecting a sewing pattern

<Sewing screen (Operator mode)>

<Sewing screen (Maintenance personnel mode)>

The sewing screen is displayed.

- Select a sewing pattern.
  Refer to **"6-2. Sewing patterns" p. 52** for details.
- Configure settings of each function which is assigned according to **"9-10. Key customization" p. 152**.
- Set up functions for the selected sewing pattern.
  Refer to **"6-2-5. Editing the sewing patterns" p. 64** and **"6-2-6. List of pattern functions" p. 69** for details.

③ Starting sewing

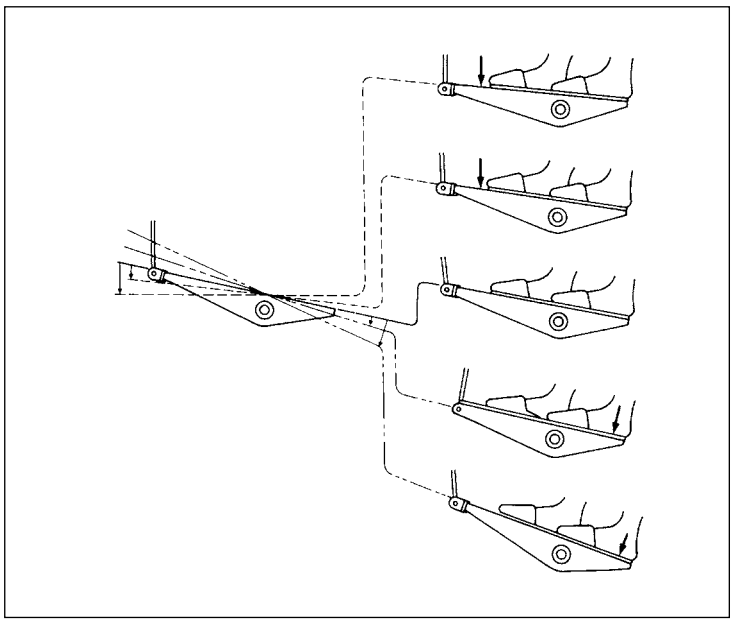

When you depress the pedal, the sewing machine starts sewing.
Refer to **"2-18. Pedal operation" p. 22**.

3. PREPARATION BEFORE SEWING

3-1. Attaching the needle

WARNING :
To protect against possible personal injury due to abrupt start of the machine, be sure to start the following work after turning the power off and ascertaining that the motor is at rest.

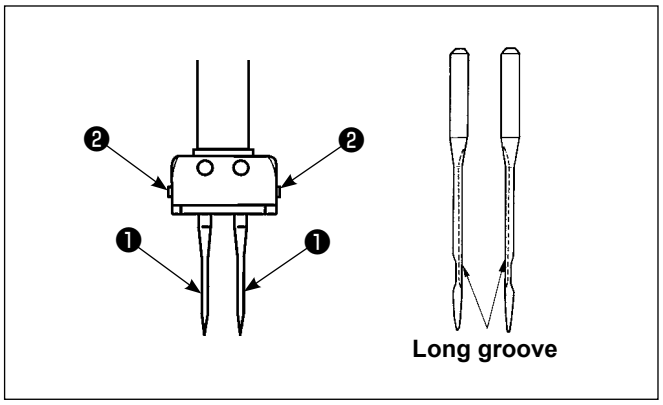

Switch "off" the motor.

Use 134-35 needles.

1) Turn the handwheel to bring the needle bar to the highest position of its stroke.
2) Loosen needle clamp screws ❷ . Hold needles ❶ so that long grooves in them are respectively faced inside.
3) Push needle ❶ deep into the needle clamp hole until it will go no further.
4) Tighten needle clamp screw ❷ firmly.

Caution
When replacing the needle, check the clearance provided between the needle and the blade point of hook. (Refer to "8-1. Needle-to-hook relation" p.105 and "8-3. Adjusting the hook needle guard" p.107.)
If there is no clearance, the needle and the hook will be damaged.

3-2. Attaching and removing the bobbin

WARNING :
To protect against possible personal injury due to abrupt start of the machine, be sure to start the following work after turning the power off and ascertaining that the motor is at rest.

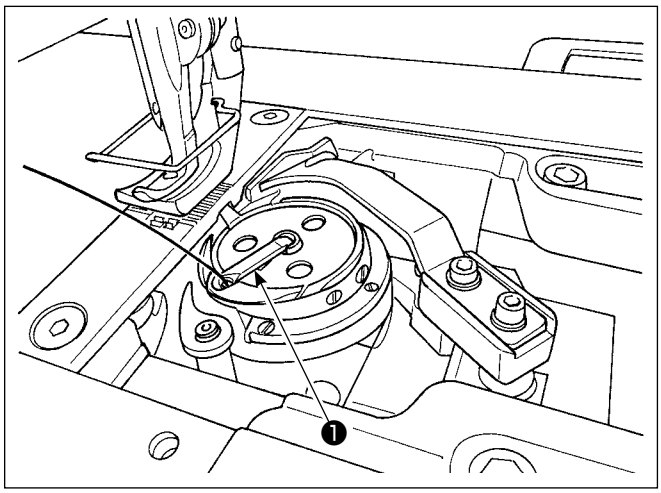

1) Lift latch ❶ of hook, and take out the bobbin.
2) Put the bobbin into the shaft in the hook correctly and release the latch ❶ .

Caution
1. **Do not make the machine run idle with the bobbin (bobbin thread). The bobbin thread is caught in the hook. As a result, the hook may be damaged.**
2. **Be careful so as not to get hurt with the top end of the counter knife.**

3-3. Threading the hook

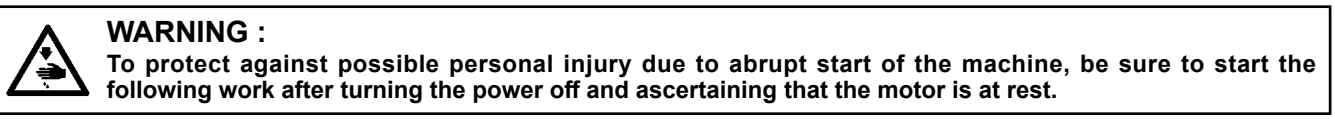

WARNING :
To protect against possible personal injury due to abrupt start of the machine, be sure to start the following work after turning the power off and ascertaining that the motor is at rest.

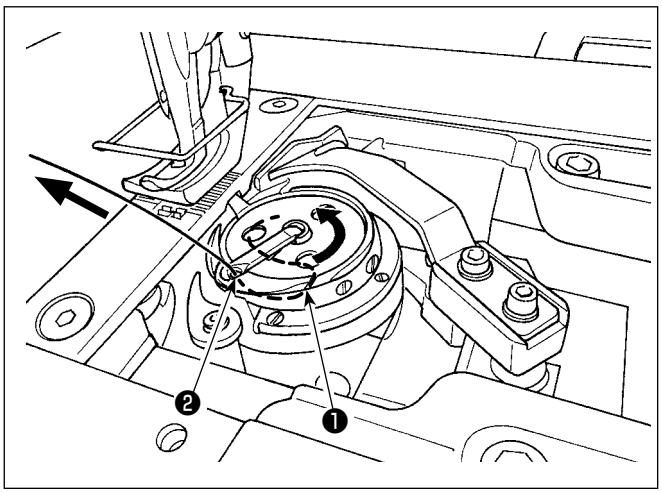

1) Pass the thread through thread path ❶ in the inner hook and thread hole ❷ in the lever, and slowly draw the thread. Now, the thread passes under the tension spring.
2) Make sure that the bobbin revolves in the direction of the arrow when you draw the thread.

3-4. Winding a bobbin

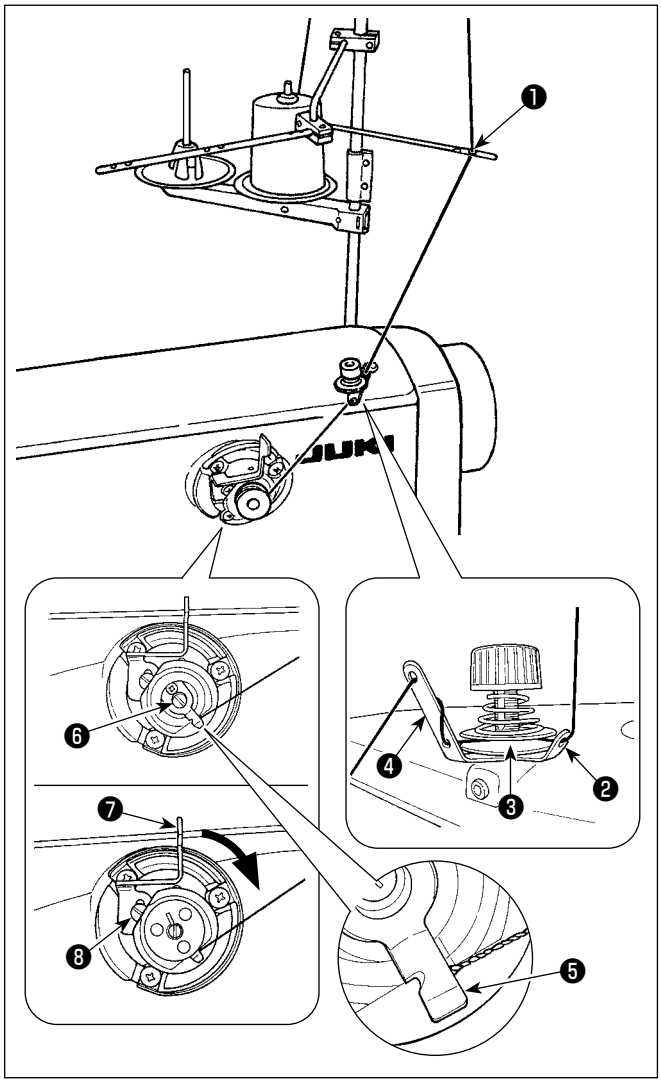

1) Pass the thread through sections ❶ to ❹ in the numerical order.
2) Put the thread until the root of bobbin thread clamp ❺ is reached. Then, trim the thread. (The thread end is retained under the looper thread clamp.)
3) Load a bobbin on bobbin winder shaft ❻ .
4) Press bobbin winder lever ❼ in the direction of the arrow.
5) When you start the sewing machine, the bobbin rotates to automatically wind the thread on itself.
6) When the bobbin is filled up, the bobbin winder lever ❼ automatically releases the bobbin and the bobbin winder stops running.

1. **The bobbin thread winding amount is adjusted by loosening setscrew ❽. The bobbin thread winding amount is increased by moving bobbin wider lever ❼ upward.**
2. **If the thread comes off the thread tension controller, wind the thread on the intermediate thread guide by one turn.**

1. **This is the one-touch type bobbin winder. When the bobbin is fully wound with thread, bobbin thread clamp ❺ automatically returns to the initial position.**
2. **To terminate bobbin winding before the bobbin is fully wound with thread, turn the handwheel, while slightly lifting bobbin winder lever ❼ , to bring bobbin thread clamp ❺ back to its initial position.**
3. **If the thread is not brought to the root of the bobbin thread clamp, the thread slips off the bobbin at the beginning of bobbin winding.**

[Bobbin winding mode]

To wind a bobbin only or to check the oil quantity in the hook, the bobbin winding mode should be used.
Depress the pedal to start winding a bobbin.

1) Display the mode screen by pressing M ❶ .

2) Select the "2. Bobbin winding mode".

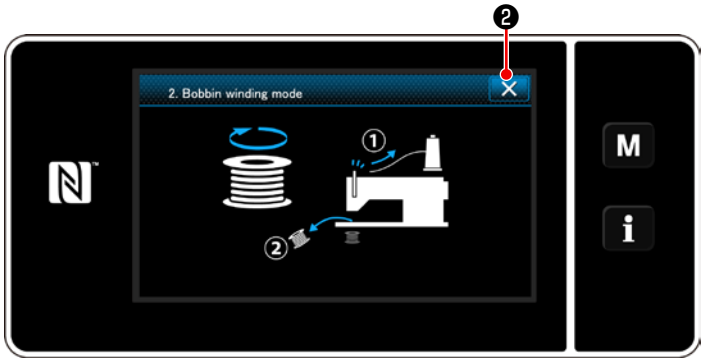

3) The sewing machine mode is changed over to the "Bobbin winding mode".
The sewing machine runs with its presser foot up when the pedal is depressed. In this state, a bobbin can be wound. The sewing machine runs only as long as the pedal is depressed.
When ✕ ❷ is pressed, the sewing machine exits from the "Bobbin winding mode".

1. **Remove the needle thread from the thread path of thread take-up and remove the bobbin from the hook.**
2. **There is the possibility that the thread pulled out from the thread stand is loosened due to the influence (direction) of the wind and may be entangled in the handwheel. Be careful of the direction of the wind.**
3. **The speed of the sewing machine under the bobbin winding mode is equal to the one which has been set for the machine head.**

3-5. Threading the machine head

WARNING :
To protect against possible personal injury due to abrupt start of the machine, be sure to start the following work after turning the power off and ascertaining that the motor is at rest.

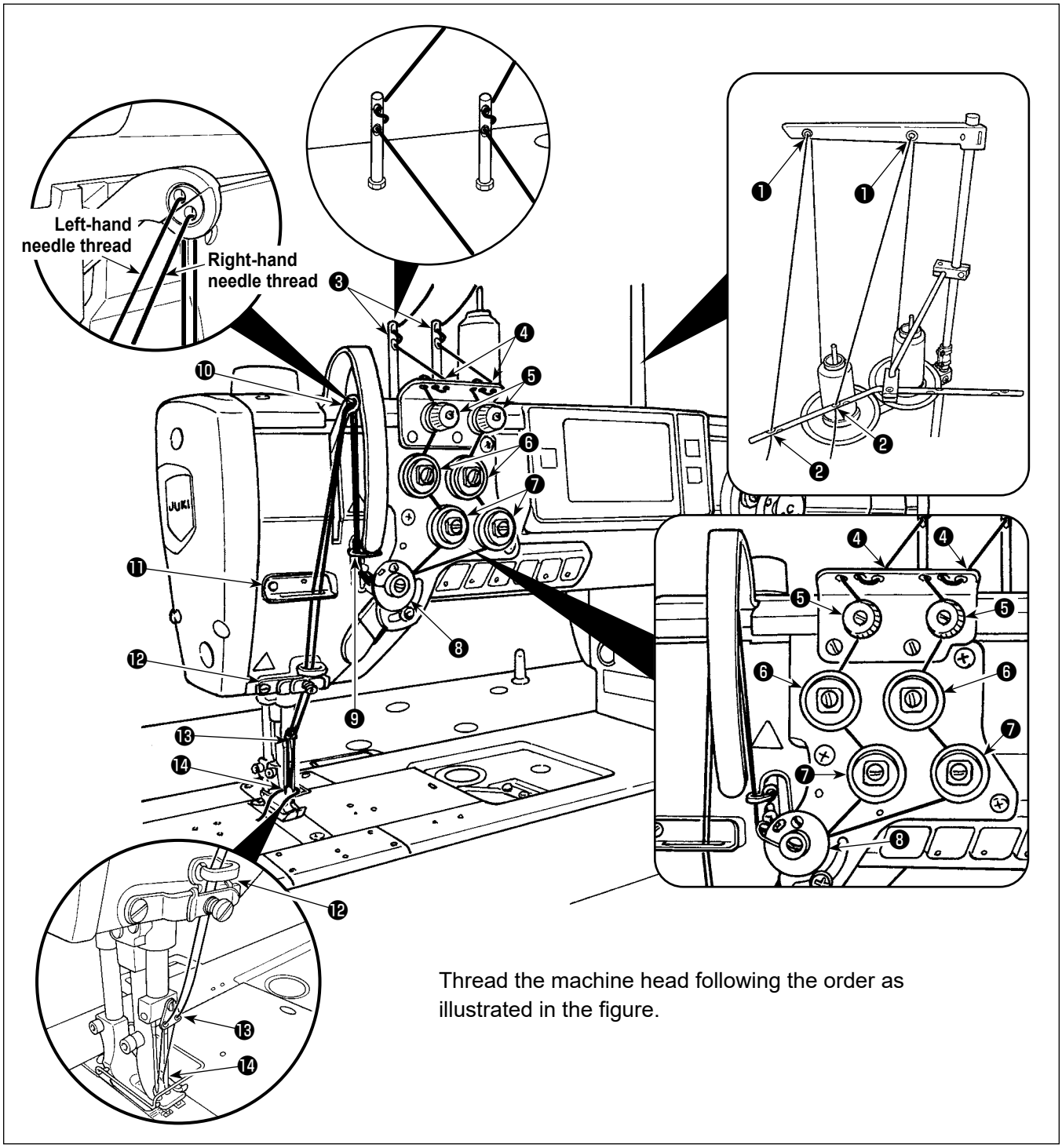

Thread the machine head following the order as illustrated in the figure.

Reference

1. **Thread guide ⓬ is necessary to prevent the thread from slipping off the needle eyelet when performing thread trimming at a position which is outside the material.**
2. **If thread tangling failure occurs when starting sewing from the material edge, the thread should be removed from the location where it is clamped with the spring of thread guide ⓬ , or thread guide ⓬ should be changed with another one.**
   The thread guide for replacement is supplied with the sewing machine as an accessory.
   Part number of replacement thread guide: 40169642

3-6. Installing the attachment

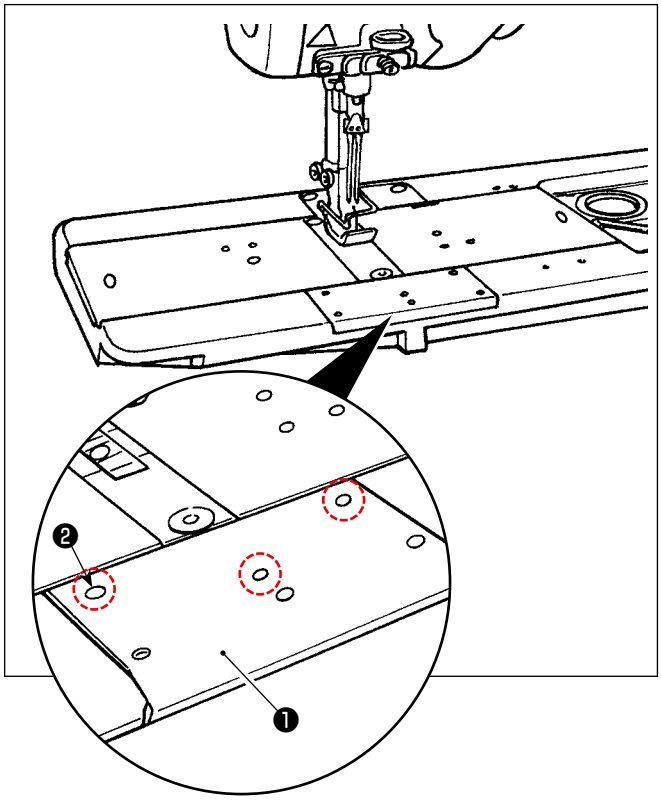

Remove screws ❷ (three pieces) from front bed slide ❶ . Install the attachment with those screws.

4. ADJUSTING THE SEWING MACHINE

4-1. Thread tension

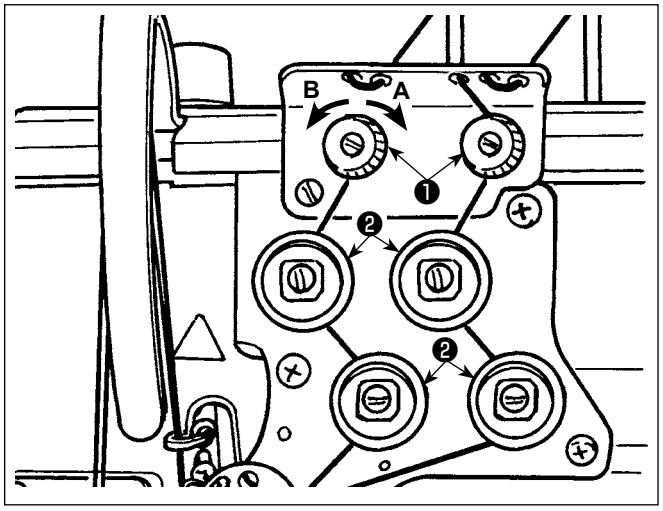

4-1-1. Adjusting the tension of thread tension controller No. 1

1) Turn thread tension nut No. 1 ❶ clockwise **A** to shorten the length of thread remaining on the top of needle after thread trimming. Turn the nut counterclockwise **B** to lengthen it.

> **Reference**
> **In the case the length of thread remaining at the needle tip is not increased, change the spring of tension controller No. 1 with the separately-available spring (Part number: 22945505).**

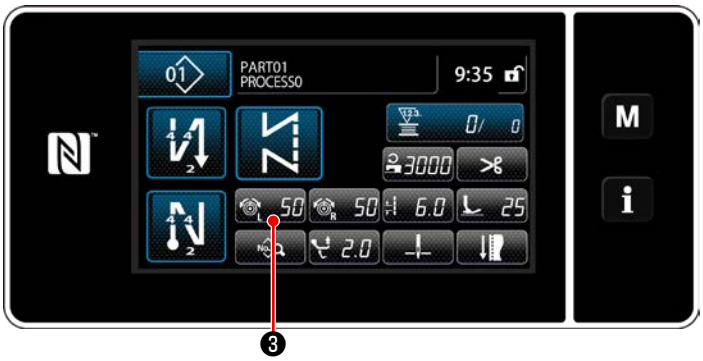

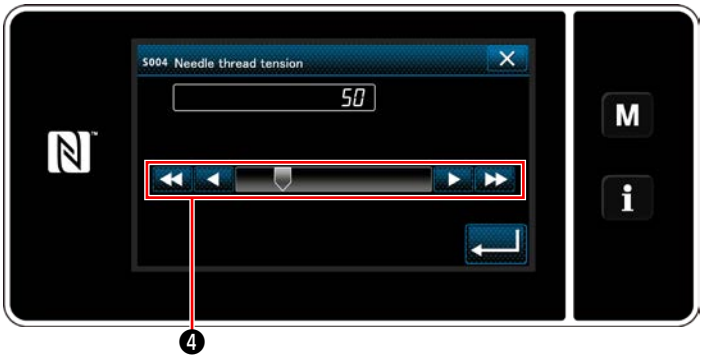

4-1-2. Adjusting the needle thread tension (Active tension)

Active tension ❷ permits setting of the needle thread tension on the operation panel according to each sewing condition. In addition, the data can be stored in memory.

1) Press 50 ❸ to set the needle thread tension, left, press 50 ❹ to set the needle thread tension, right. Then, the needle thread tension input screen will be displayed.
2) Change the needle thread tension as desired by pressing ❺ .
3) There is a setting range of 0 to 140.
   When the set value is increased, the tension becomes higher.

* When the set value is 36 at the time of standard delivery, the thread tension is adjusted to 3.9 N (Tetoron thread #8). (Reference)

* Set values of the needle thread tensions (left) (right) may differ due to adjustment of thread tension according to the result of actual sewing.

> **WARNING :**
> **To protect against possible personal injury due to abrupt start of the machine, be sure to start the following work after turning the power off and ascertaining that the motor is at rest.**

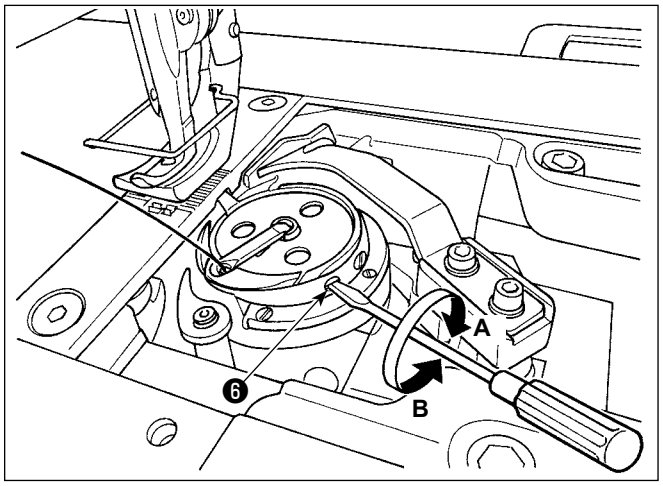

4-1-3. Adjusting the bobbin thread tension

Turn tension adjustment screw ❺ clockwise **A** to increase the bobbin thread tension, or counterclockwise **B** to decrease it.

4-2. Thread take-up spring

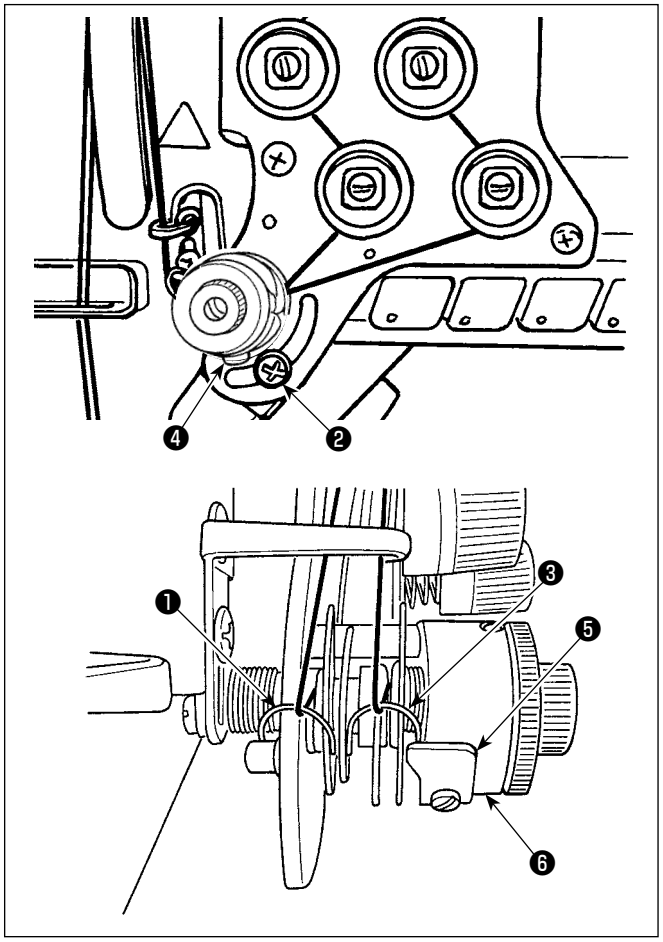

4-2-1. When you want to change the stroke of the thread take-up spring

1) Loosen screw ❷ . Adjust thread take-up spring ❶ by moving it in the slot.
2) Loosen screw ❹ . Adjust thread take-up spring ❸ by moving thread take-up spring adjusting plate ❺ along thread take-up spring base ❻ .

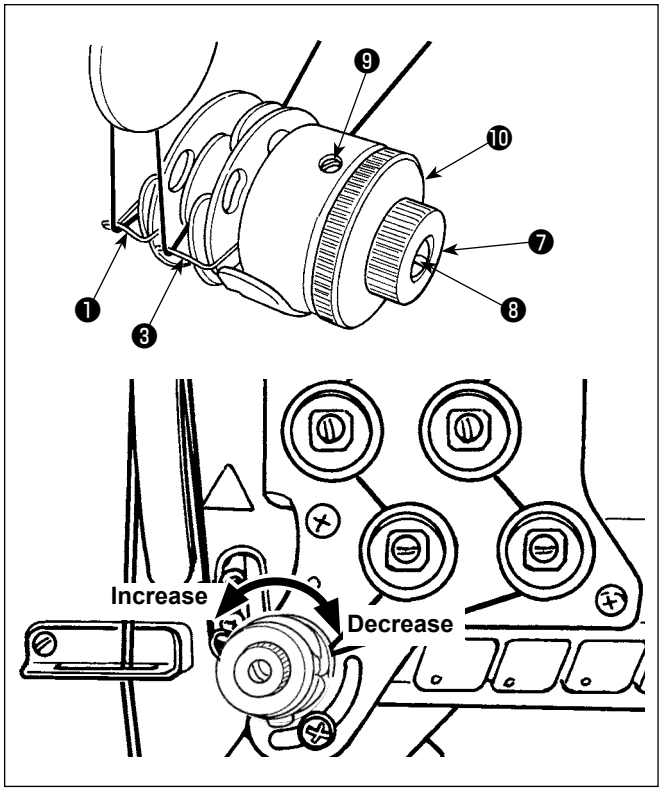

4-2-2. When you want to change the tension of the thread take-up spring

1) To adjust the tension of thread take-up spring ❶, loosen nut ❼ first. Turn spring shaft ❽ counter-clockwise to increase the tension or clockwise to decrease it.
   After the adjustment, fix the stud by tightening nut ❼ .
2) To change the tension of thread take-up spring ❸ , loosen screw ❾ first. Turn nut ❿ counter-clockwise to increase the tension or clockwise to decrease it.
   After the adjustment, fix nut by tightening screw ❾ .

4-3. Presser foot (Active presser device)

WARNING :
Do not place anything under the presser foot when turning the power ON. If the power is turned ON while placing something under the presser foot, the sewing machine displays E910.

If the power to the sewing machine is turned ON while the material, etc. is placed under the presser foot, the presser stepping motor will generate a specific sound during origin retrieval. It should be noted that this phenomenon is not a fault.

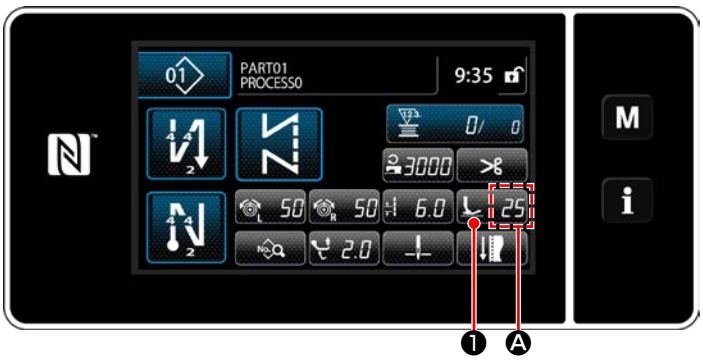

4-3-1. Presser foot pressure

The presser foot pressure is displayed in section Ⓐ on the panel. (Example of display : 100)

[How to change]

1) Display the presser foot pressure entry screen by pressing 100 ❶ .

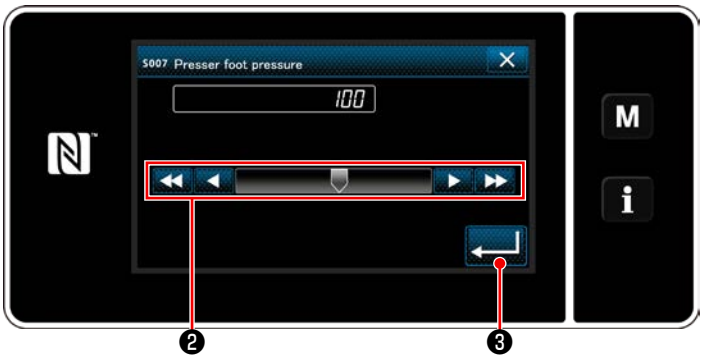

2) Change the presser foot pressure as desired by pressing ❷ . (Range of input values on the panel is from -20 to 200.)
   * Refer to the following for a rough indication of the input value on the panel and the presser foot pressure.
3) Confirm your entry by pressing ❸ .
   Then, the sewing screen is displayed.

Input value on the panel	Presser foot pressure (Reference)
0	Approx. 80 N (8 kg)
5 (Factory-setting at the time of shipment)	Approx. 100 N (10 kg)

1. To avoid personal injury, never put your fingers under the presser foot.
2. Be aware that the presser foot pressure varies when the presser foot or the throat plate is changed.

4-3-2. Micro-lifter function

Sewing while lifting the presser foot by very small amount is enabled by inputting a negative value on the panel.

* Refer to the table shown below for a rough indication of the relation among the value input on the panel, the presser foot height and the presser foot pressure.

Input value on the panel	Presser foot height	Presser foot pressure (Reference)
0	0 mm	Approx. 80 N (8 kg)
-20	Approx. 5 mm	Approx. 140 N (14 kg)

***1 The presser foot height 0 mm means the state the sole of presser foot comes in contact with the top surface of throat plate.**
***2 The presser foot pressure varies when the presser foot or the throat plate is changed.**
***3 Range of input values on the panel is from -20 to 200.**

1. Be sure to input a positive value on the operation panel in the case the micro-lifter function is not used. If not, the presser foot is slightly raised and the feed dog is unable to provide a sufficient efficiency of feed.
2. In the case of using the micro-lifter function, the efficiency of feed is likely to be insufficient. To achieve the sufficient efficiency of feed, reduce the sewing speed or help feed the material by hand.

4-4. Adjusting the stitch length

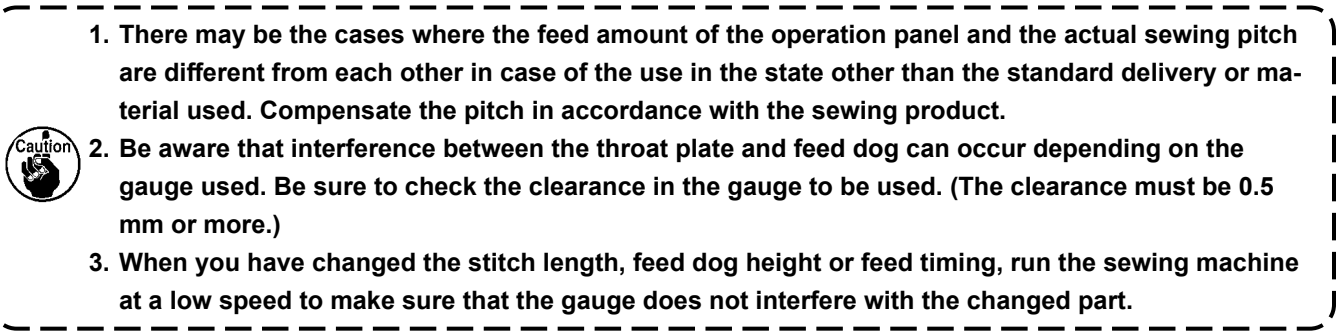

1. There may be the cases where the feed amount of the operation panel and the actual sewing pitch are different from each other in case of the use in the state other than the standard delivery or material used. Compensate the pitch in accordance with the sewing product.
2. Be aware that interference between the throat plate and feed dog can occur depending on the gauge used. Be sure to check the clearance in the gauge to be used. (The clearance must be 0.5 mm or more.)
3. When you have changed the stitch length, feed dog height or feed timing, run the sewing machine at a low speed to make sure that the gauge does not interfere with the changed part.

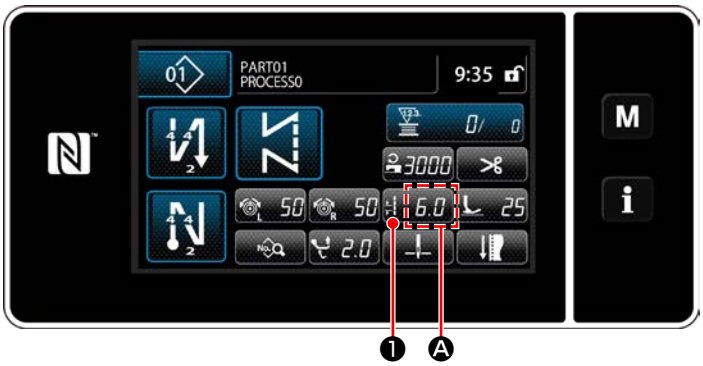

Stitch length is displayed in section Ⓐ on the panel. (Example of display : 6.0 mm)

[How to adjust]

1) When 6.0 ❶ is pressed, the stitch length input screen is displayed.

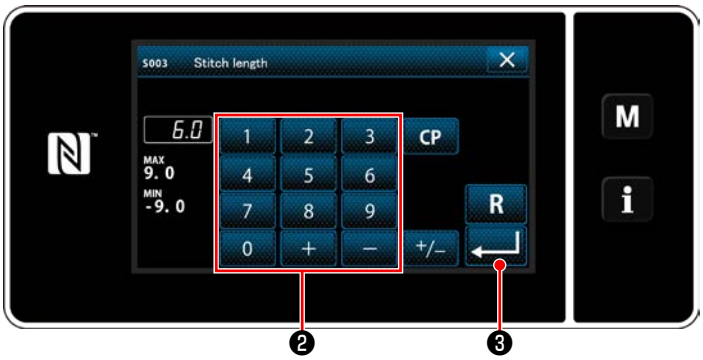

2) Change the stitch length by pressing numeric keypad ❷ .
(Input unit: 0.1 mm; Input range: -9.0 to 9.0)
3) Confirm your entry by pressing ↵ ❸ .
Then, the sewing screen is displayed.

4-5. Changing the sewing speed

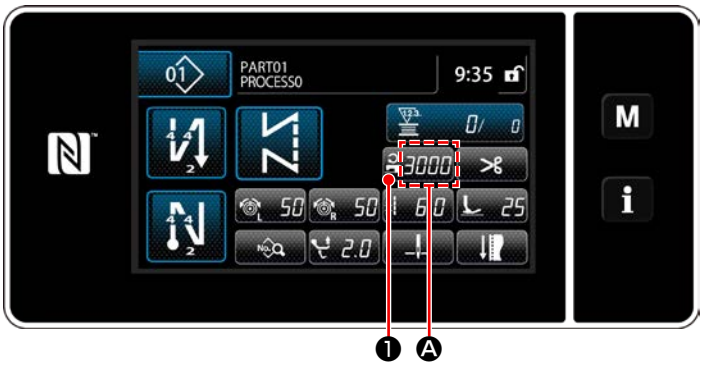

The sewing speed is displayed in section Ⓐ on the panel. (Example of display : 3,000 sti/min)

[How to change]

1) Display the sewing speed entry screen by pressing 3000 ❶ .

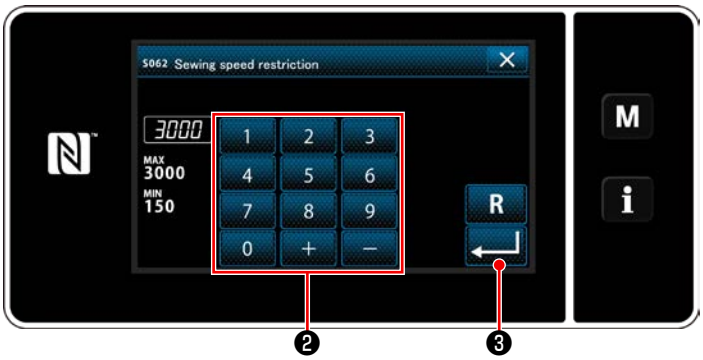

2) Change the sewing speed as desired by pressing ten keys ❷ .
3) Confirm your entry by pressing ↵ ❸ .
Then, the sewing screen is displayed.

* The sewing speed may be automatically reduced according to the amount of the alternating vertical movement of the walking foot and presser foot and the stitch length.
(Refer to **"10. SEWING SPEED TABLE" p.163**)

4-6. Adjusting the alternating vertical movement amount

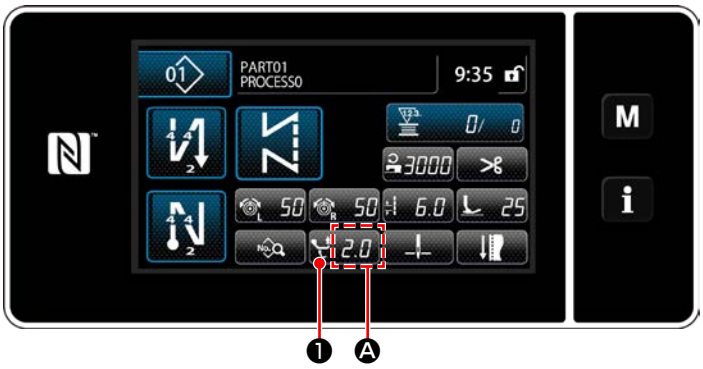

The alternating vertical movement amount is displayed in section Ⓐ on the operation panel. (Example of display : 2.0 mm)

[How to adjust]

1) When 2.0 ❶ is pressed, the alternating vertical movement amount input screen is displayed.

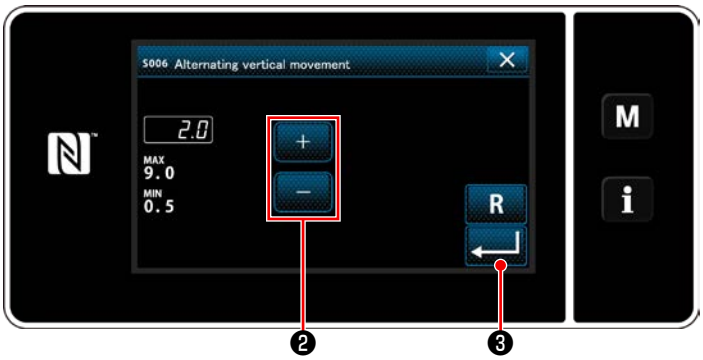

2) Change the alternating vertical movement amount by pressing numeric keypad ❷. (Input unit: 0.5 mm; Input range: 0.5 to 9.0 mm)
3) Confirm your entry by pressing ❸. Then, the sewing screen is displayed.

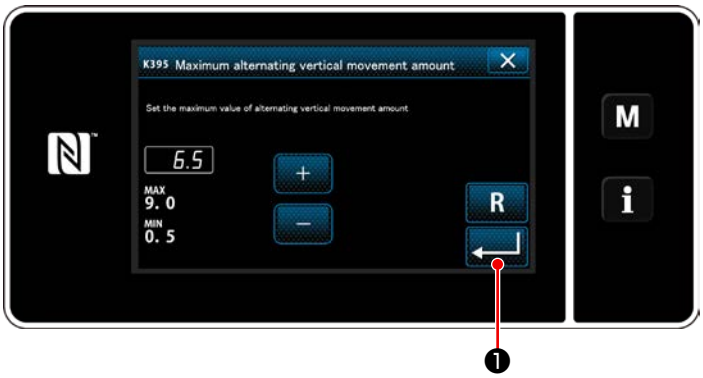

[Setting the amount of the alternating vertical movement of the walking foot and presser foot]

The amount of the alternating vertical movement of the walking foot and presser foot has been factory-limited to 6.5 mm at the time of shipment. If you want to cancel the limit, change the setting of the following item as described below.

1) Press M. Select "1. Memory switch" from the menu list.
2) Select "K395 Maximum alternating vertical movement amount" from "1. Display all".
3) Set the amount of the alternating vertical movement of the walking foot and presser foot. (Factory-set value: 6.5)
4) Confirm your entry by pressing ❶. Then, the sewing screen is displayed.

Caution

When cancelling the limit, the presser foot and walking foot may interfere with each other. The presser foot may also interfere with the needle bar in the case of using a heavy-weight material. Check to make sure that there is no interference between the above before using the sewing machine.

4-7. Thread trimming and condensation stitching function

Thread length remaining on the material after thread trimming is shortened by performing condensation stitching before thread trimming.

Due to computerization of the feed mechanism, the machine generates noise that is specific to the stepping motor when it runs at a low speed. This noise is not a sign of fault.

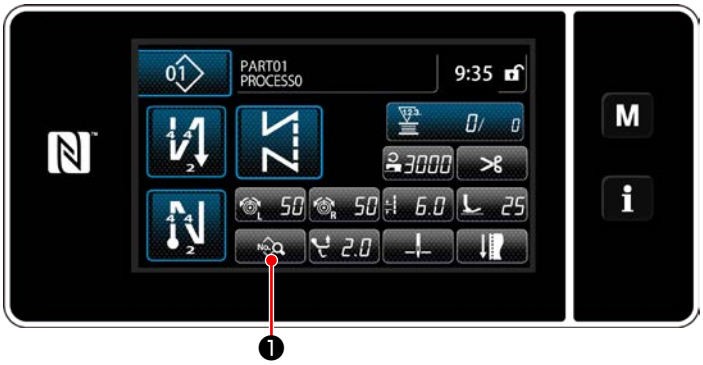

[How to set the condensation stitch]

1) Display the sewing data edit screen by pressing ❶.

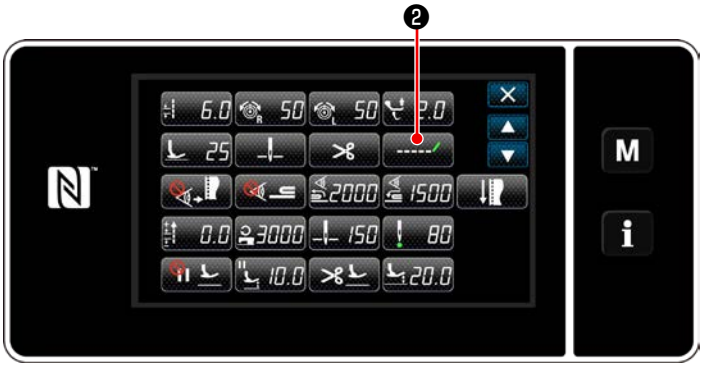

2) Display "S055 Shorter thread remaining" by pressing ❷.

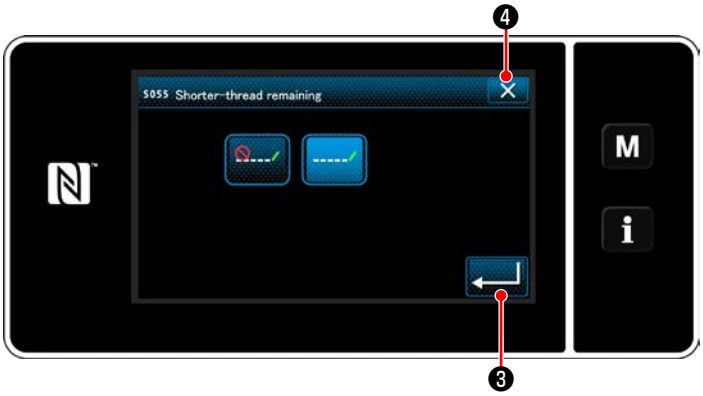

3) ON / OFF (with or without condensation stitching) of condensation stitching before thread trimming is set.
4) Confirm your entry by pressing ❸.
5) Display the sewing screen by pressing ❹.

[How to adjust condensation pitch]

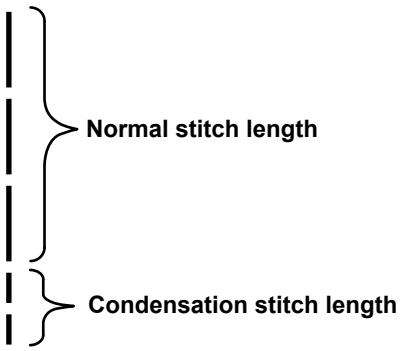

In the case of performing condensation stitching after thread trimming (condensation stitching is placed in ON), set values of the stitch length and that of the number of condensation stitching can be changed.
Adjust those set values appropriately according to the item to be sewn.

[Setting the number of condensation stitches]

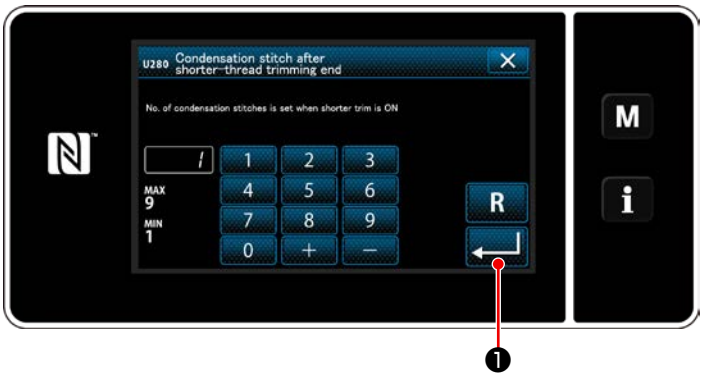

1) Press **M**. Select "1. Memory switch" from the menu list.
2) Select "U280 Number of end condensation stitches for shorter-thread remaining thread trimming" from "1. Display all".
3) Set the number of stitches.
(Factory-set value: 1)
4) Confirm your entry by pressing ↵❶.
Then, the sewing screen is displayed.

[Setting the stitch length of condensation stitching]

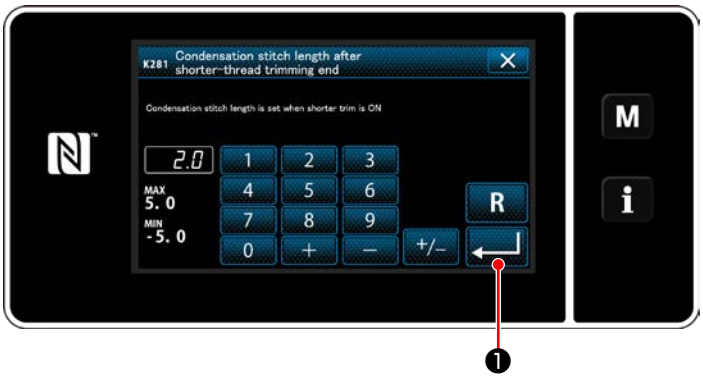

1) Press **M**. Select "1. Memory switch" from the menu list.
2) Select "K281 Condensation stitch length after shorter-thread trimming end" from "1. Display all".
3) Set the stitch length of condensation stitching. (Factory-set value: 2.0)
4) Confirm your entry by pressing ↵❶.
Then, the sewing screen is displayed.

Caution

1. **If the condensation stitch length is extremely short, the material can be torn by the seam to cause stitch skipping. This may cause a thread trimming failure.**
2. **If a thread trimming failure occurs, when using a heavy-weight material, since the needle enters the same entry points repeatedly during thread trimming and condensation stitching, the thread trimming and condensation stitching function should be placed in OFF or the condensation stitch length should be adjusted to a larger value.**

4-8. LED hand light

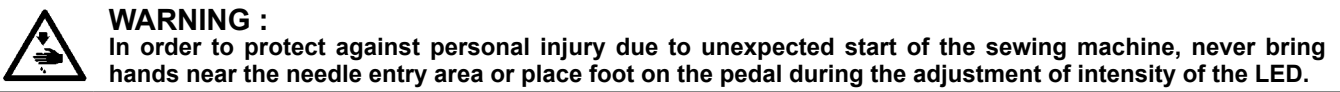

WARNING :
In order to protect against personal injury due to unexpected start of the sewing machine, never bring hands near the needle entry area or place foot on the pedal during the adjustment of intensity of the LED.

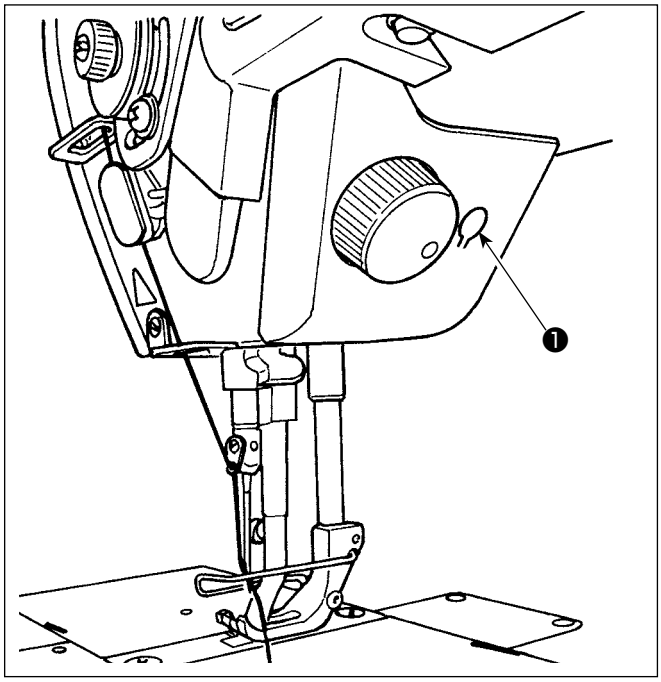

*** This LED is intended to improve operability of the sewing machine and is not intended for maintenance.**

The sewing machine is provided as standard with an LED light which illuminates the needle entry area. Intensity adjustment and turn-off of the light is carried out by pressing switch ❶. Every time the switch is pressed, the light is adjusted in intensity in six steps and is turned off in turn.

[Change of intensity]

1 ⇒ ..... 5 ⇒ 6 ⇒ 1
Bright ⇒ ..... Dim ⇒ Off ⇒ Bright

In this way, every time the switch ❶ is pressed, the hand lamp status is changed in repetition.

4-9. Reverse feed stitching

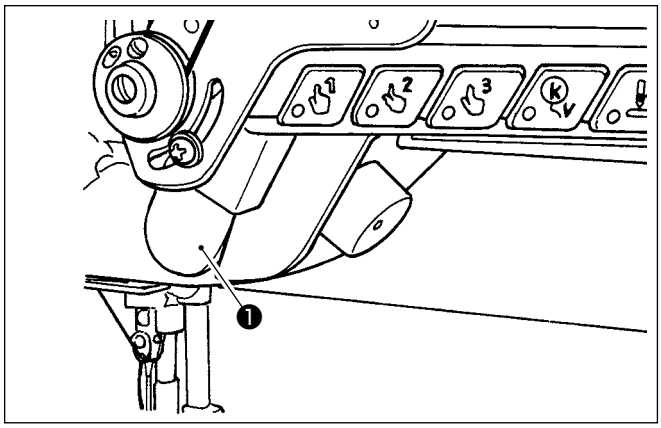

[One-touch type reverse feed stitching mechanism]

The hand switch ❶ is pressed, the machine performs reverse feed stitching.
The machine resumes normal feed stitching the moment the switch lever is released.

4-10. Jog dial

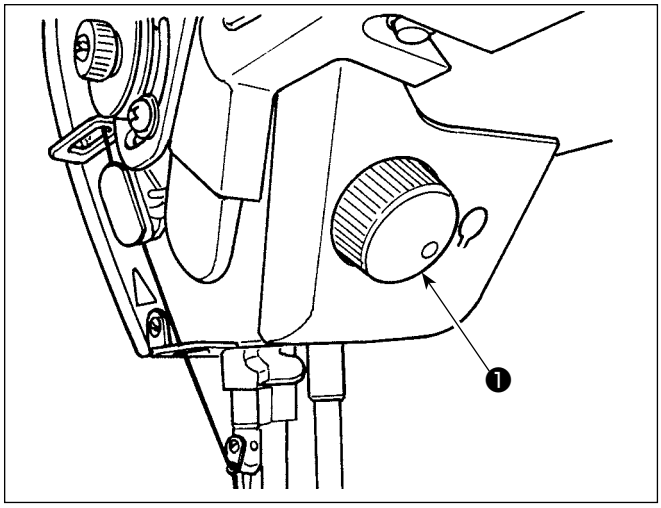

When jog dial ❶ is pressed, the needle up/down correction switch function works. The function of switch can be changed. (Refer to **"4-11. Custom switch" p.41**)
The pulley is rotated by turning jog dial ❶ .

4-11. Custom switch

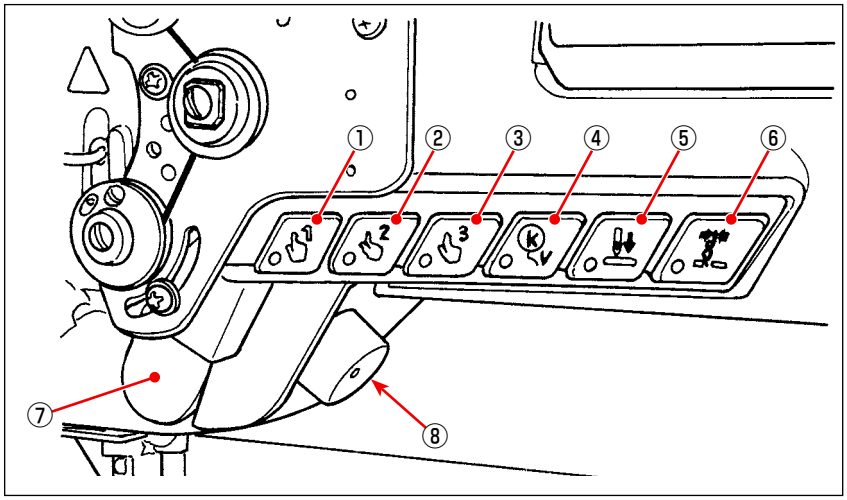

Operations can be assigned to machine head switches ① to ⑥ , hand switch ⑦ and jog dial ⑧ .

The initial values (states) are as described below.

① Machine head switch 1: One touch changeover switch 1
② Machine head switch 2: One touch changeover switch 2
③ Machine head switch 3: One touch changeover switch 3
④ Machine head switch 4: Cancellation/addition switch for automatic reverse feed stitching
⑤ Machine head switch 5: Needle entry alignment switch
⑥ Machine head switch 6: Thread clamp switch
⑦ Hand switch: Reverse feed stitching switch
⑧ Jog dial: Needle up/down correction switch

1) M ❶ held pressed for three second.

The "mode screen" is displayed.

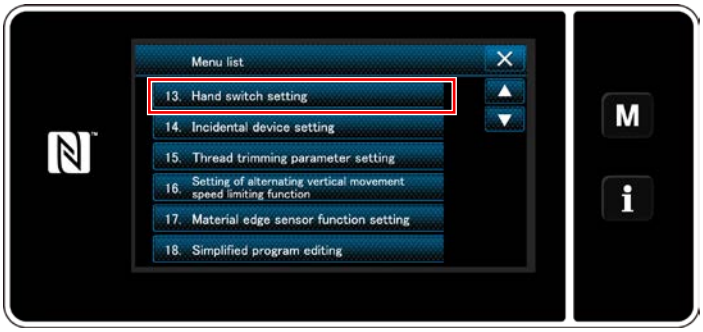

2) Select the "13. Hand switch setting".

3) Select the switch to be set.

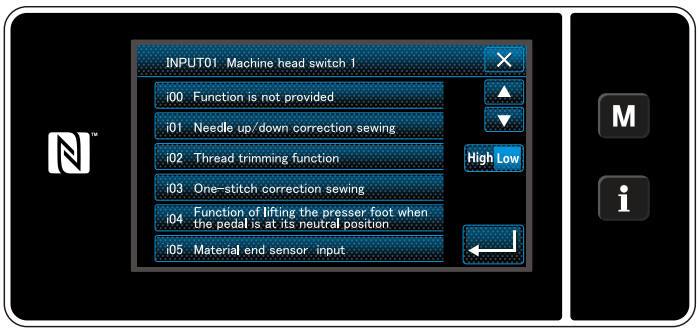

4) Select the function item to be assigned to the switch. Then, select the input signal status (High / Low) .

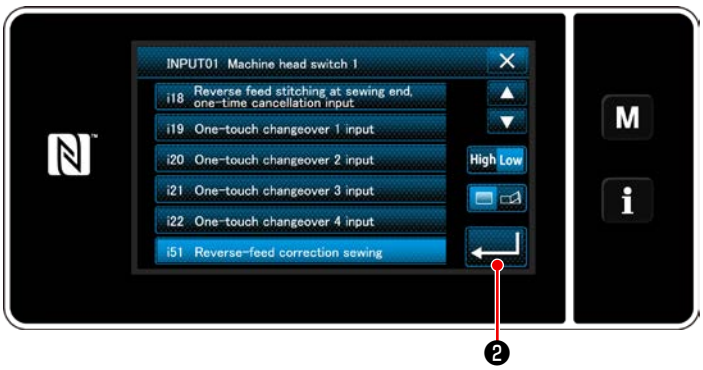

In the case the function item i51 or beyond is selected, the operation to be carried out when the button is pressed is set.

: Function is enabled while the button is held pressed.

: Enable/disable of the function is changed over by pressing the button.

5) Press ❷ .

[Description of operations of the custom switch]

	Function item
i00	No function is set
i01	Needle up/down correction stitch
i02	Thread trimming function
i03	One stitch correction stitch
i04	Function of lifting the presser foot when the pedal is placed in its neutral position
i05	Material edge sensor input
i06	Needle lifting function
i07	Safety switch input
i08	Sewing counter input
i09	Reverse-rotation needle-up function
i10	Bobbin change switch input
i11	Custom output reset input
i12	Counter reset
i13	Changeover input of pause and stitch alignment function
i14	Changeover input of interlock function of presser lifting and needle thread tension
i15	Needle entry alignment
i16	Function of one-time cancelling of reverse feed stitching at sewing end
i17	Cancellation/addition switch for automatic reverse feed stitching
i18	S / EBT one-time cancellation input

	Function item
i19	One-touch changeover 1 input
i20	One-touch changeover 2 input
i21	One-touch changeover 3 input
i22	One-touch changeover 4 input
i51	Reverse-feed correction stitch
i52	Presser lifting function
i53	Function of cancelling reverse feed stitching at sewing start and sewing end
i54	Function of prohibiting depress on the front part of pedal
i55	Function of prohibiting thread trimming output
i56	Low-speed command input
i57	High-speed command input
i58	Reverse feed stitching switch input
i59	Soft start switch input
i60	One-shot speed command switch input
i61	Reverse-feed one-shot speed command switch input
i62	Center guide input
i63	Thread clamp switch input
i64	Stop switch input
i65	Tsw command prohibition input
i66	Lsw command prohibition needle-up stop input
i67	Jog dial function

4-12. Adjusting the oil quantity in the hook

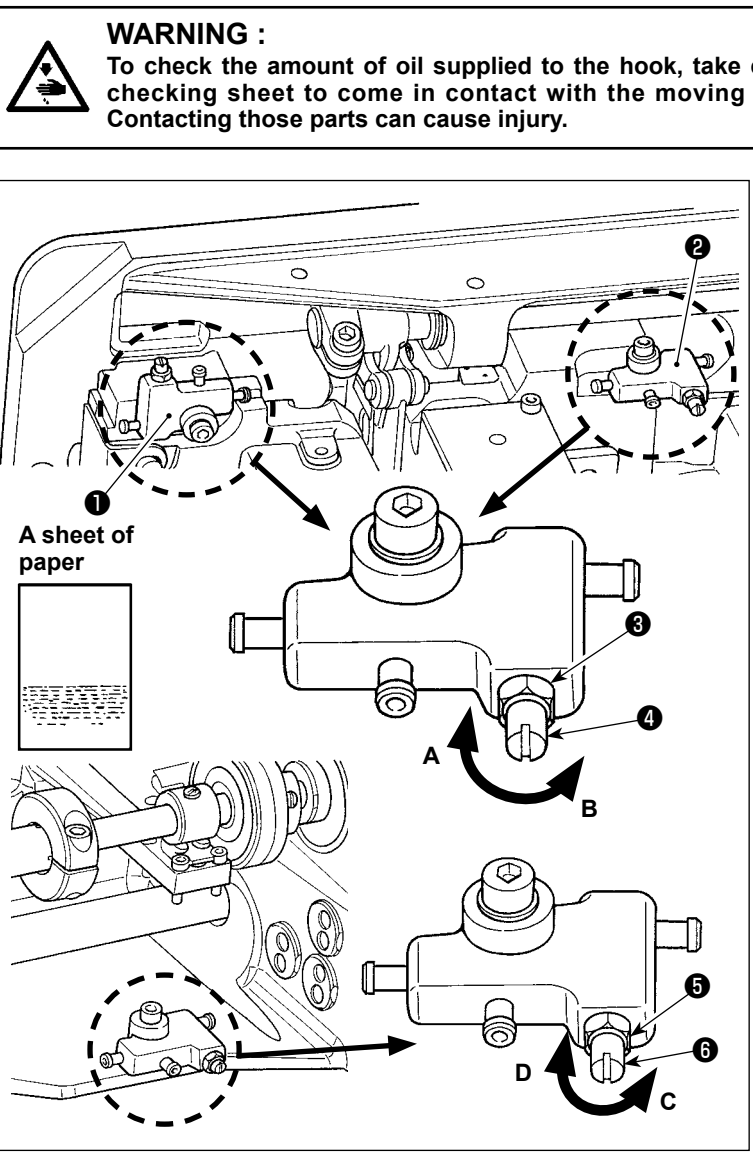

1) Adjust distribution board ❶ to adjust the oil quantity in the left hook or distribution board ❷ to adjust the oil quantity in the right hook as described below.
2) Loosen nut ❸ and turn oil amount adjustment screw ❹ to adjust the amount of oil in the hook.
   Turning the screw clockwise **A** will decrease the amount of oil in the hook or counterclockwise **B** will increase it.
3) The appropriate amount of oil, when a sheet of paper is placed near the periphery of the hook, is to such an extent that splashes of oil from the hook appear in approximately five seconds as shown in the figure on the left.

In the case the oil quantity in the hook cannot be adjusted to the proper quantity, it should be adjusted by loosening nut ❺ and turning oil quantity adjusting screw ❻ . The oil quantity in the hook is increased by turning the oil quantity adjusting screw counterclockwise C, or is decreased by turning it clockwise D.
Also check to be sure that the oil is fed to the hook at the sewing speed of 1,000 sti/min.

5. OPERATION OF THE SEWING MACHINE

5-1. Resetting the safety clutch

WARNING :
To protect against possible personal injury due to abrupt start of the machine, be sure to start the following work after turning the power off and ascertaining that the motor is at rest.

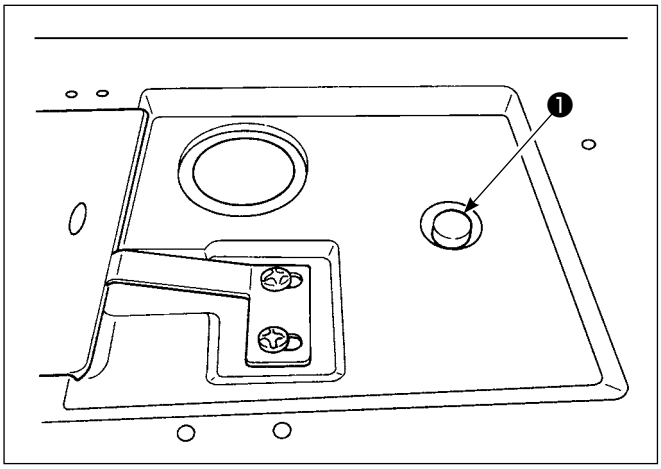

The safety clutch functions when an excessive load is applied to the hook or the other components during sewing. At this time, the hook will never rotate even if turning the handwheel. When the safety clutch has functioned, remove the cause and reset the safety clutch as given in the following procedure.

1) Pressing push button ❶ located on the top surface of the machine bed, strongly turn the handwheel in the reverse direction of rotation.
2) The resetting procedure completes when the handwheel clicks.

Caution
1. Turn the handwheel by hand, and confirm that push button ❶ has returned.
2. Handwheel cannot be turned by hand unless the power to the sewing machine is placed in OFF.

3) At the final step of procedure, check the needle-to-hook relation. (Refer to **"8-1. Needle-to-hook relation" p.105**)

5-2. Lifting the presser foot at an emergency

WARNING :
To protect against possible personal injury due to abrupt start of the machine, be sure to start the following work after turning the power off and ascertaining that the motor is at rest.

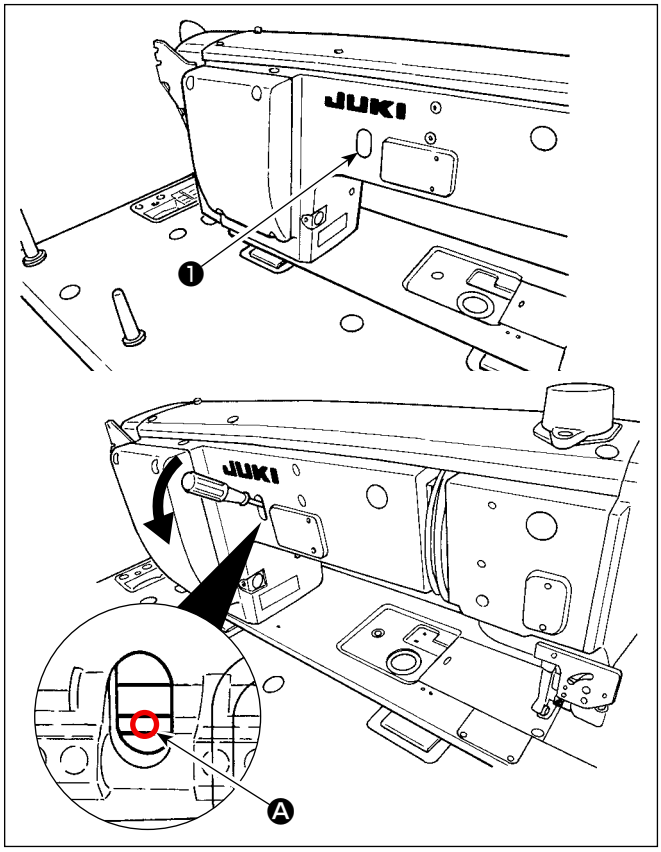

In the case it is necessary to lift the presser foot at a time of emergency such as a power failure, detach rubber cap ❶ , put a screwdriver or the like between the shafts and push down the screwdriver to lift the presser foot.

Caution
Do not leave the screwdriver or the like between the shafts.

5-3. Power lamp

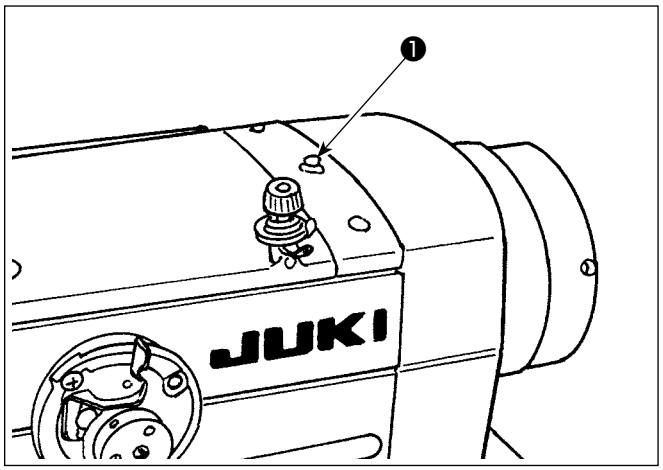

Power lamp ❶ lights up when the power to the sewing machine is turned ON.
Power lamp ❶ flashes on and off in the case an error occurs.

5-4. Knee switch

WARNING :
To protect against possible personal injury due to abrupt start of the machine, be sure to start the following work after turning the power off and ascertaining that the motor is at rest.

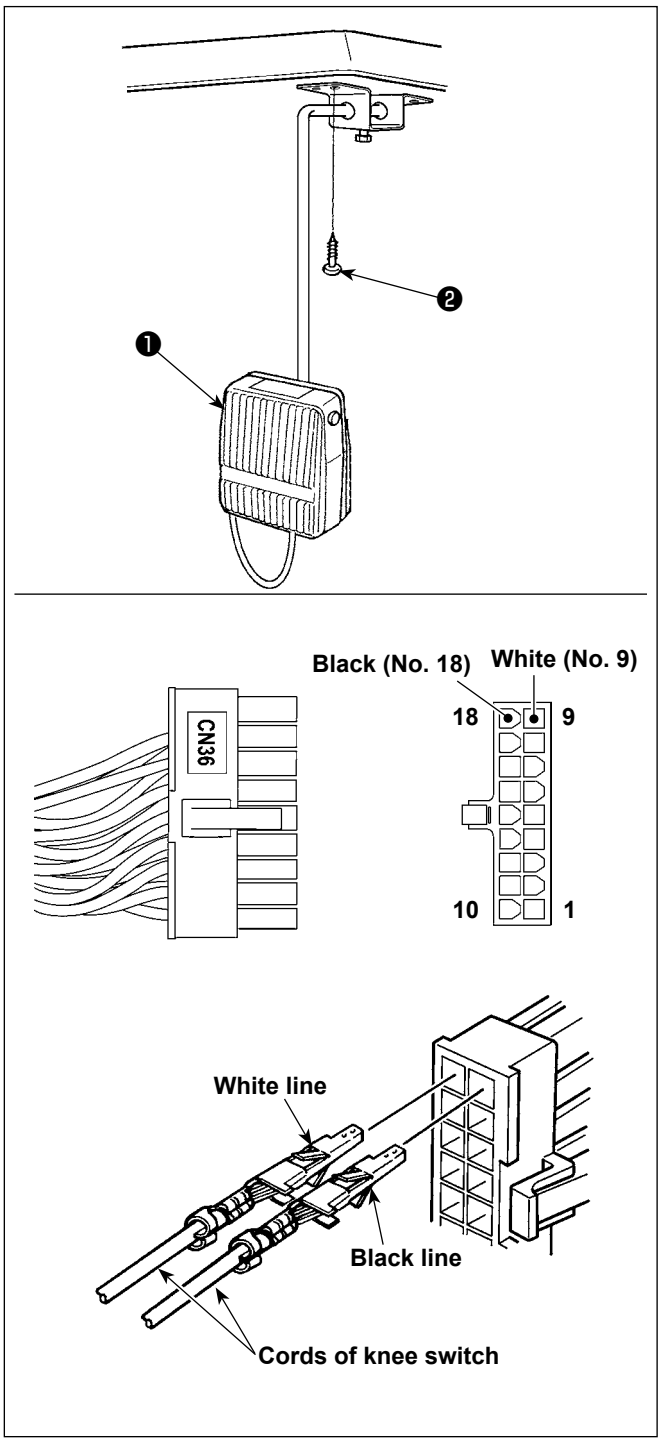

(1) Installation of the knee switch

1) Assemble the knee switch ❶ . Then, fix it on the undersurface of the table with a wood screw ❷ .
2) Connect the knee switch ❶ to No. 9 and No. 18 pins of the machine connector 18P which is connected to CN36 of the machine controller.

(2) Functions of the knee switch

When knee switch ❶ is pressed, the data is changed over to the data on one-touch changeover 4.
(Refer to **"6-2-8. One-touch utility changeover function" p.79**)
The knee lifter switch can also be used as the presser bar lifting lever through the relevant function setting.
(When it is used as the presser lifter switch, it loses its function as the one-touch changeover 4 switch.)

6. HOW TO USE THE OPERATION PANEL

6-1. Explanation of the sewing screen (when selecting a sewing pattern)

On the sewing screen, the shape and set values of the currently-sewn sewing pattern are displayed.
The display and button operation differ according to the selected sewing pattern.
Note that the sewing screen shows two different displays, i.e., the sewing pattern display and the counter display.
Refer to **"6-3. Counter function" p. 85** for the description of the counter display.
There are two different screen display modes; i.e., **<Operator mode>** and **<Maintenance personnel mode>**.
The mode can be changed over between the operator mode and the maintenance personnel mode by simultaneously pressing M ❶ and i ❷.

(1) Sewing screen (when selecting a sewing pattern)

A sewing pattern can be selected with ❿. Four different stitch shapes are available as shown below.

<Operator mode>

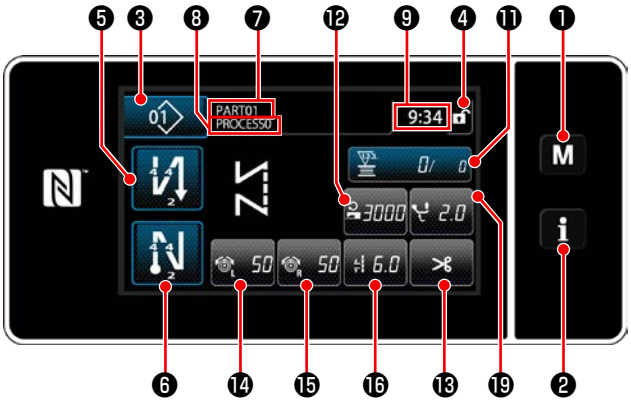

<Maintenance personnel mode>

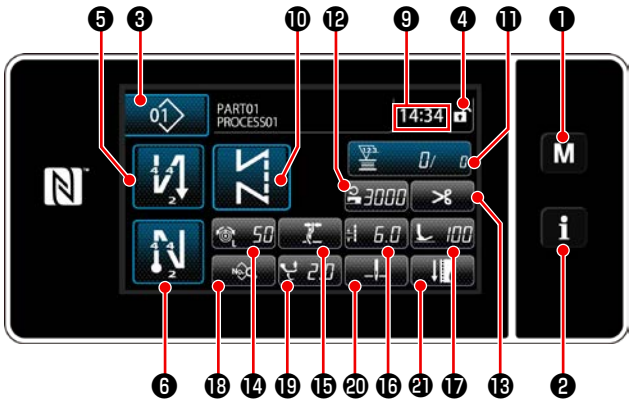

Free stitching pattern (Operator mode)

Constant-dimension sewing pattern (Operator mode)

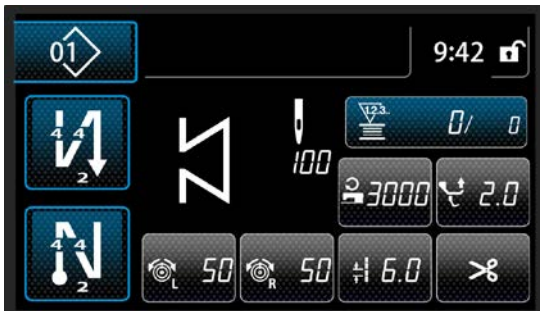

Multi-layer stitching pattern (Operator mode)

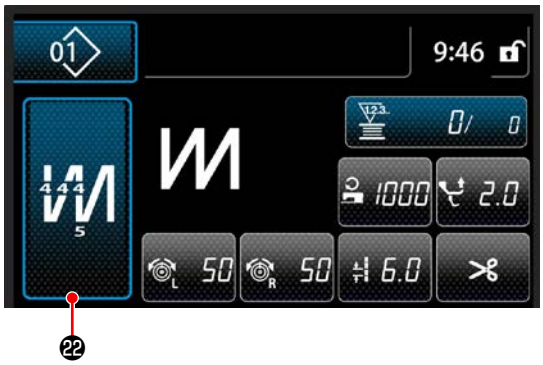

Polygonal-shape stitching pattern (Operator mode)

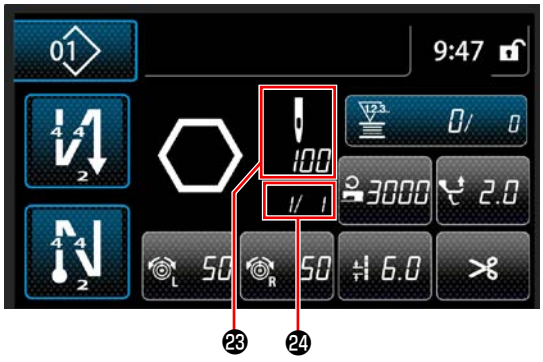

Free stitching pattern
(Maintenance personnel mode)

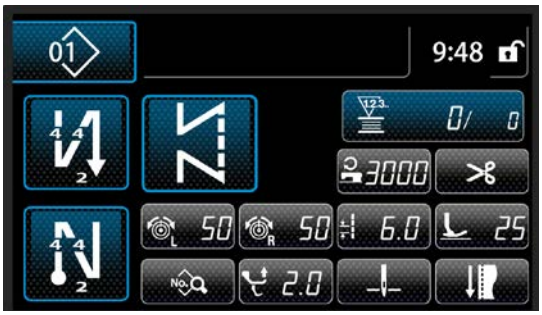

Constant-dimension sewing pattern
(Maintenance personnel mode)

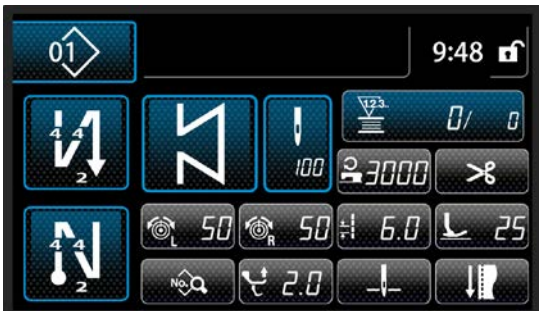

Multi-layer stitching pattern
(Maintenance personnel mode)

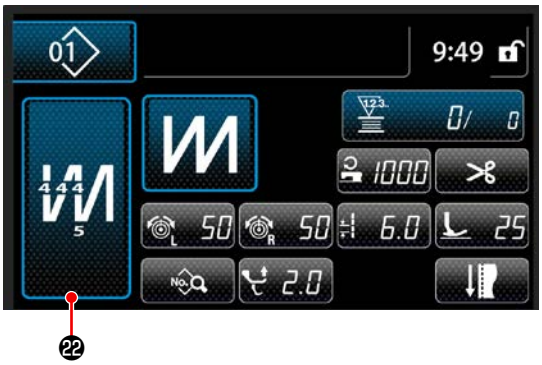

Polygonal-shape stitching pattern
(Maintenance personnel mode)

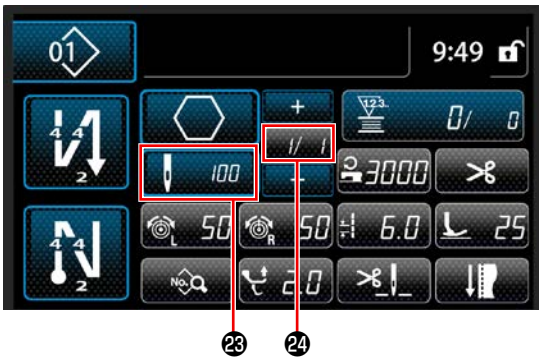

	Switch/display	Description
❶	Mode key	This switch is used for displaying the menu screen. Level 1 is displayed by pressing this switch in the normal manner. Level 2 or Level 3 is displayed by keeping this switch held pressed for three seconds or more for the former or six seconds or more for the latter. The mode is changed over between the operator mode and maintenance personnel mode by pressing the Mode key and the Information key simultaneously.
❷	Information key	This switch is used for displaying the information screen. Level 1 or Level 2 is displayed by pressing this switch in the normal manner for the former or by keeping it held pressed for three seconds or more for the latter. The mode is changed over between the operator mode and maintenance personnel mode by pressing the Information key and the Mode key simultaneously.
❸	Sewing pattern No. button	Sewing pattern list screen is displayed. The currently-selected sewing pattern number is displayed on this button. (P01 – P99)
❹	Simplified screen lock button	This is button is used for changing over the operation status of buttons displayed on the screen between enable and disable. This button is used for displaying the simplified lock status of the screen on it. Locked: Unlocked: Once the button operation is locked using the simplified screen lock button, operation of the buttons displayed on the screen, excluding this button will be disabled.
❺	Sewing-start reverse-feed stitch button	This switch is used for changing the ON/OFF status of the reverse feed stitching at the beginning of sewing. When reverse feed stitching at the beginning of sewing is placed in the OFF state, mark is displayed at the upper left of the button. The reverse feed stitching (at start) edit screen is displayed by keeping this key held pressed for one second. → This button is displayed for free stitching, constant-dimension sewing or polygonal-shape stitching.

	Switch/display	Description
❻	Sewing-end reverse-feed stitch button	This switch is used for changing the ON/OFF status of reverse feed stitching at the end of sewing. When reverse feed stitching at the end of sewing is placed in the OFF state, mark is displayed at the upper left of the button. The reverse feed stitching (at end) edit screen is displayed by keeping this key held pressed for one second. → This button is displayed for free stitching, constant-dimension sewing or polygonal-shape stitching.
❼	Part number	The part number is displayed in this field.
❽	Process/comment	Depending on the setting of memory switch U404, the process or comment is displayed in this field.
❾	Clock display	The time set on the sewing machine is displayed in this field in 24-hour system.
❿ *	Pattern shape button	Selected sewing pattern is displayed on this screen. Four different sewing patterns are available, i.e., free stitching pattern, constant-dimension sewing pattern, multi-layer stitching pattern and polygonal-shape stitching pattern. The shape selection screen is displayed by pressing this button.
⓫	Customization button	A selected function can be allocated to and registered with this button. This button has been initially set to the "Bobbin thread / sewing counter". Refer to **"6-2-6. List of pattern functions" p. 69**.
⓬	Customization button	A selected function can be allocated to and registered with this button. This button has been initially set to the "Sewing speed". Refer to **"6-2-6. List of pattern functions" p. 69**.
⓭	Customization button	A selected function can be allocated to and registered with this button. This button has been initially set to the "Thread trimming". Refer to **"6-2-6. List of pattern functions" p. 69**.
⓮	Customization button	A selected function can be allocated to and registered with this button. This button has been initially set to the "Needle thread tension, left". Refer to **"6-2-6. List of pattern functions" p. 69**.
⓯	Customization button	A selected function can be allocated to and registered with this button. This button has been initially set to the "Needle thread tension, right". Refer to **"6-2-6. List of pattern functions" p. 69**.
⓰	Customization button	A selected function can be allocated to and registered with this button. This button has been initially set to the "Stitch length". Refer to **"6-2-6. List of pattern functions" p. 69**.
⓱ *	Customization button	A selected function can be allocated to and registered with this button. This button has been initially set to the "Presser foot pressure". Refer to **"6-2-6. List of pattern functions" p. 69**.
⓲ *	Customization button	A selected function can be allocated to and registered with this button. This button has been initially set to the "Sewing data list". Refer to **"6-2-6. List of pattern functions" p. 69**.
⓳	Customization button	A selected function can be allocated to and registered with this button. This button has been initially set to the "Alternating vertical movement amount". Refer to **"6-2-6. List of pattern functions" p. 69**.
⓴ *	Customization button	A selected function can be allocated to and registered with this button. This button has been initially set to the "Stop position of needle bar". Refer to **"6-2-6. List of pattern functions" p. 69**.
㉑ *	Customization button	A selected function can be allocated to and registered with this button. This button has been initially set to the "Sewing adjustment". Refer to **"6-2-6. List of pattern functions" p. 69**.
㉒	Multi-layer stitching button	The multi-layer stitching setting screen is displayed by keeping this button held pressed for one second. Refer to **"6-2-5. Editing the sewing patterns" p. 64**. → This button is displayed when multi-layer stitching is selected.

	Switch/display	Description
㉓	Number of stitches	This button is used for displaying the number of stitches of constant-dimension sewing or the number of stitches registered for each step of polygonal-shape stitching. → This button is displayed when constant-dimension sewing or polygonal-shape stitching is selected.
㉔	Display of the number of steps of a polygonal-shape stitching pattern	This button is displayed when constant-dimension sewing or polygonal-shape stitching is selected (1 to 30). → This button is displayed when polygonal-shape stitching is selected.

*** Only in the case the maintenance personnel mode is selected.**

6-2. Sewing patterns

Patterns which are frequently sewn can be registered as sewing patterns.
Once the patterns are registered as sewing patterns, the desired sewing pattern can be called up only by selecting its sewing pattern number.
As many as 99 different patterns can be registered as sewing patterns.

6-2-1. Sewing pattern configuration

One sewing pattern consists of four elements, i.e., reverse feed stitching (at start), main stitching, reverse feed stitching (at end) and pattern function.

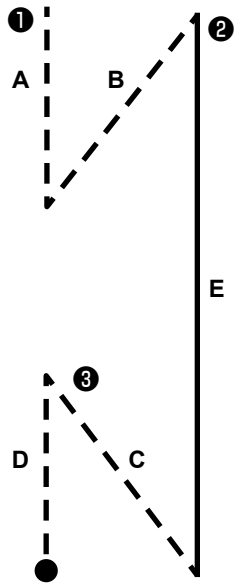

	Pattern No. 1 - No. 99
❶	Reverse feed stitching (at start) section Refer to **"6-2-3. Reverse feed stitching (at start) pattern" p. 55**.
❷	Main stitching section · Free stitching · Constant-dimension sewing · Multi-layer stitching · Polygonal-shape stitching Refer to **"6-2-5. Editing the sewing patterns" p. 64** and **"9-2. Setting up the polygonal-shape stitching" p. 121**.
❸	Reverse feed stitching (at end) section Refer to **"6-2-4. Reverse feed stitching (at end) pattern" p. 63**.

❹	Pattern function Refer to **"6-2-5. Editing the sewing patterns" p. 64**.

6-2-2. List of sewing patterns

The list of stored sewing patterns are displayed on the screen. Under the maintenance personnel mode, sewing patterns can be created, copied and deleted.

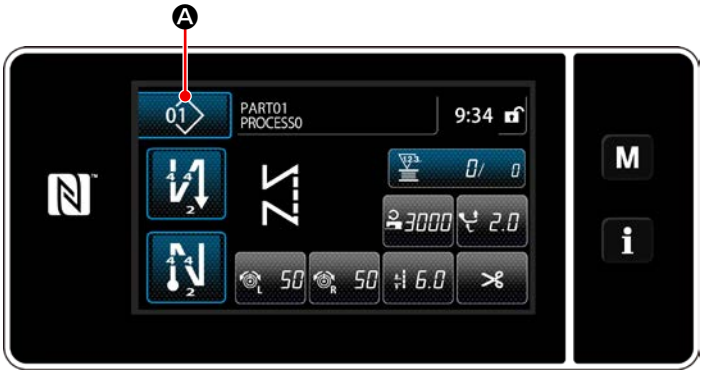

<Sewing screen (operator mode)>

Press 01 Ⓐ on the sewing screen of each mode.
The sewing pattern number list screen is displayed.

Pattern list screen: In numerical order (Operator mode)

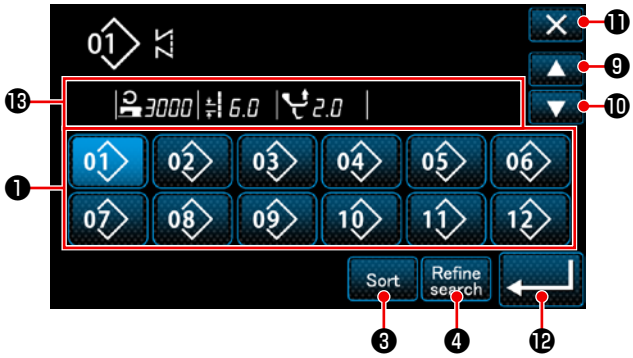

Pattern list screen: In alphabetical order (Operator mode)

Pattern list screen: In numerical order (Maintenance personnel mode)

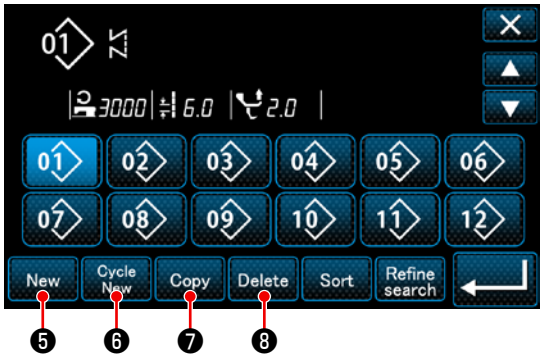

Pattern list screen: In alphabetical order (Maintenance personnel mode)

	Name	Function
❶	Pattern No. button	This button is used for displaying numbers of the registered sewing patterns and cycle patterns. (Cycle pattern numbers that are not registered are not displayed.) When this button is pressed, the sewing pattern is put into the selected state. Display range: Sewing pattern numbers 1 to 99 and cycle patterns 1 to 9.
❷	Pattern number (in the order of registration of characters) button	Sewing pattern is displayed and the pattern is put into the selected state by pressing this button.
❸	Sorting button	This button is used for sorting the registered patterns in the order of sewing pattern number, process, part number or comment.
❹	Refining button	This button is used for displaying the refiner setting screen.
❺	New sewing pattern creation button	This button is used for creating a new sewing pattern. Refer to **"9-1-1. Creation of a new pattern" p. 117**. * This button is only displayed under the maintenance personnel mode.
❻	New cycle pattern creation button	This button is used for creating a new cycle pattern. Refer to **"9-3. Cycle pattern" p. 128**. * This button is only displayed under the maintenance personnel mode.
❼	Pattern copy button	This button is used for copying a sewing pattern or cycle pattern and registering the copied pattern with new number. Refer to **"9-1-2. Copying a pattern" p. 119**. * This button is only displayed under the maintenance personnel mode.
❽	Pattern delete button	This button is used for displaying the pattern deletion confirmation message. In the case there is only one registered pattern, the pattern cannot be deleted. * This button is only displayed under the maintenance personnel mode.
❾	Scroll (up) button	This button is used for displaying the previous page.
❿	Scroll (down) button	This button is used for displaying the next page.
⓫	Close button	This button is used for cancelling the selected pattern and displaying the sewing screen.
⓬	Enter button	This button is used for confirming the selected pattern and displaying the sewing screen.
⓭	Display of pattern data being selected	This button is used for displaying data on the pattern that is being selected.

6-2-3. Reverse feed stitching (at start) pattern

A stitch shape of the reverse feed stitching (at start) is set by following the steps of procedure described below.

(1) Enabling the reverse feed stitching (at start) pattern

The sewing-start reverse feed stitching pattern can be operated when the sewing-start reverse feed stitching function is placed in the ON state (mark is not displayed).
If this function is placed in the OFF state, press the sewing start reverse feed stitch button to switch off mark display to enable the sewing-start reverse feed stitching function.

(2) Changing the number of stitches and pitch of reverse feed stitching (at start) pattern

◆ **In the case of operator mode**

① **Displaying the edit screen for reverse feed stitching (at start)**

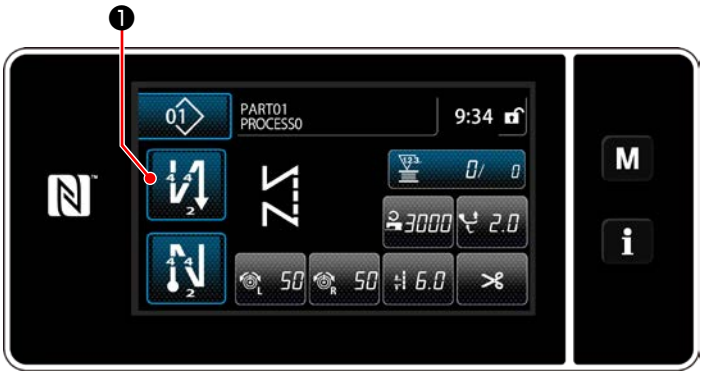

❶ held pressed for one second. The reverse feed stitching (at start) edit screen is displayed.

② **Setting the number of stitches and the number of repetitions of reverse feed stitching at the beginning of sewing**

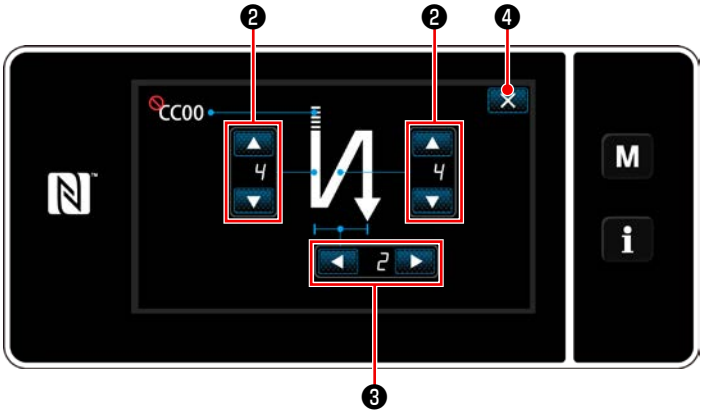

<Edit screen for reverse feed stitching (start) (operator mode)>

Change the number of reverse feed stitches with ❷ .
Change the number of repetitions of reverse feed stitching with ❸ . (In the case of setting the number of times of reverse feed stitching to "2", the sewing machine performs reverse feed stitches by the set number of stitches once in the normal direction and once in the reverse feed direction respectively.)
The value you have entered is confirmed by pressing ❹ Then, the sewing screen is displayed.

◆ **In the case of maintenance personnel mode**

① Selecting the type of reverse feed stitching at the beginning of sewing

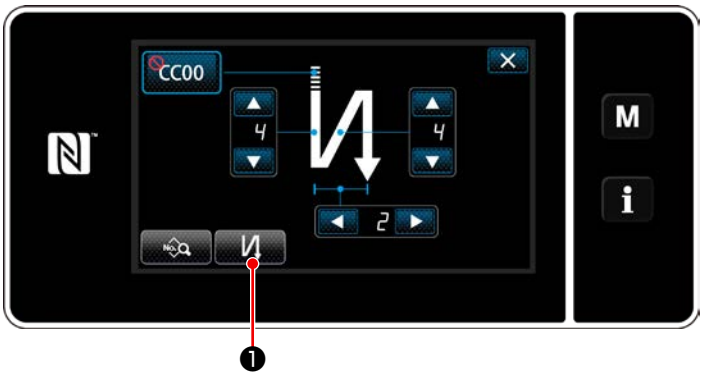

<Sewing-start reverse-feed stitching screen (maintenance personnel mode)>

1) Display the sewing-start reverse-feed stitching edit screen referring to the case of the operator mode.
2) Press ❶ to display the reverse feed stitching type input screen.
   Select one of the reverse feed stitching patterns to be used at the beginning of sewing:
   - Reverse feed stitch ❷
   - Condensation stitch ❸
   - Condensation custom stitch CC ❹

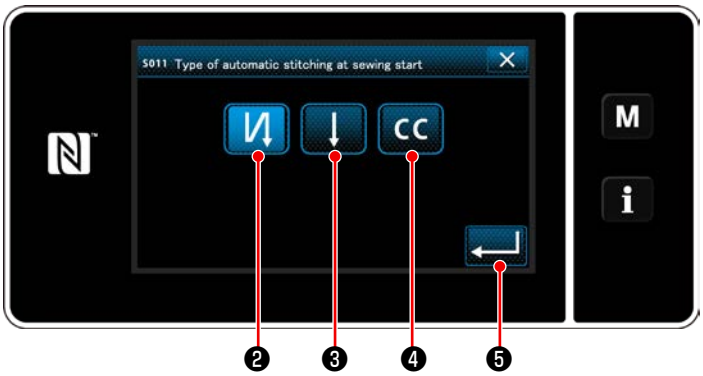

<Type of reverse-feed stitching input screen (maintenance personnel mode)>

3) Press ❺ to confirm the aforementioned operation and return the current screen to the sewing-start reverse-feed stitching screen.

② Setting the shape of reverse feed stitch at the beginning of sewing

- **In the case of selecting reverse feed stitch ❷**

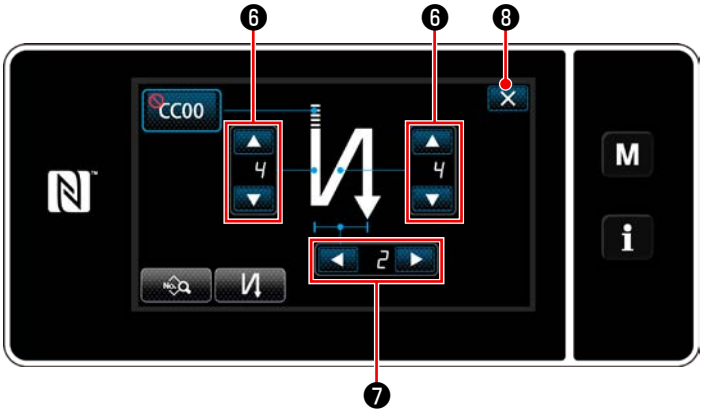

Change the number of reverse feed stitches with ❻.

Change the number of repetitions of reverse feed stitching with ❼.

The value you have entered is confirmed by pressing ❽ Then, the sewing screen is displayed.

- **In the case of selecting condensation stitch** ❸

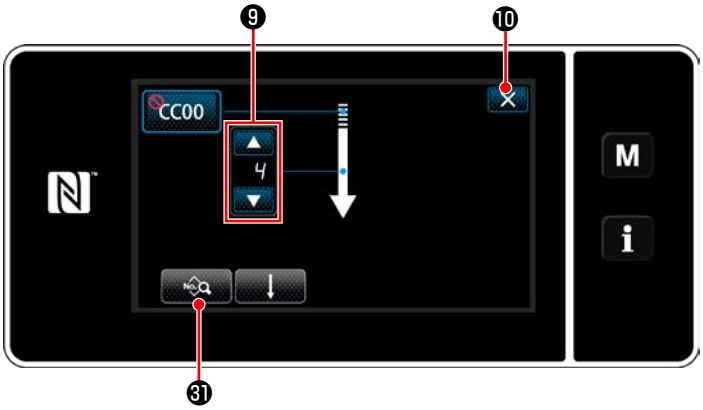

The stitch length, etc. can be set with ㉛ . Change the number of condensation stitches with ❾ .

The value you have entered is confirmed by pressing ❿ Then, the sewing screen is displayed.

- **In the case of selecting condensation custom stitch** ❹

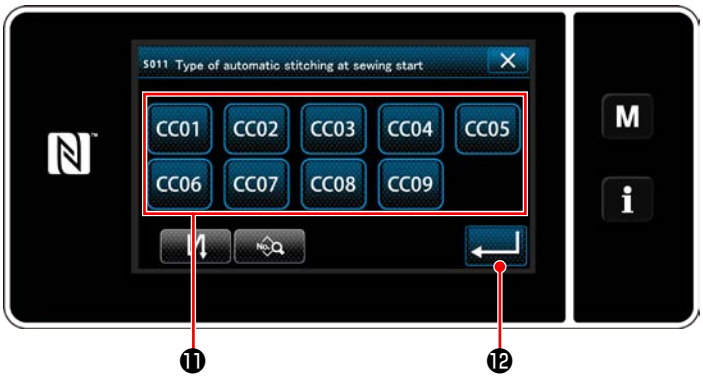

1) When ❹ is selected on the reverse feed stitching type input screen, the condensation custom selection screen is displayed.

* In the case the condensation custom button is not used, mark is displayed.

2) Press button ⓫ to select the condensation custom.

3) Press ⓬ to confirm the aforementioned operation and return the current screen to the sewing-start reverse-feed stitching screen.

* Refer to **"9-5. Condensation custom pattern" p. 140** for details of the condensation custom stitching.

③ Editing the data on reverse feed stitching at the beginning of sewing

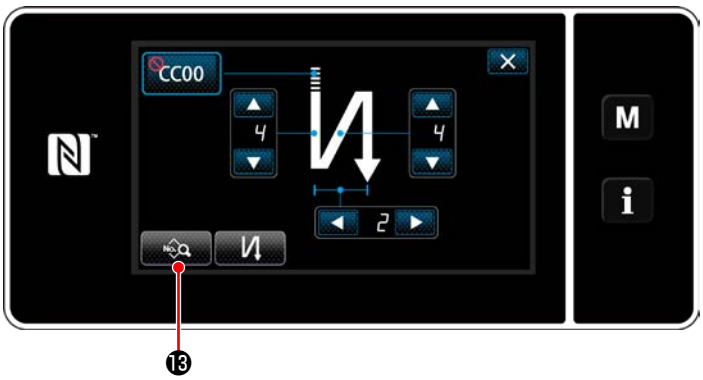

1) When ⓭ is pressed on the sewing-start reverse feed stitching screen, the "sewing-start reverse feed stitching data edit screen" is displayed.

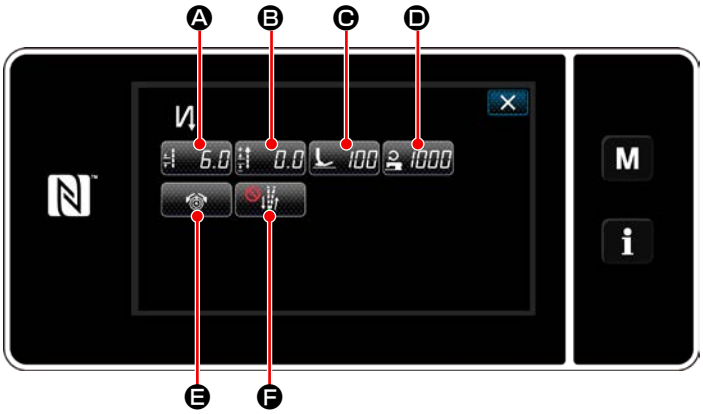

<Sewing-start reverse feed stitching data edit screen>

- **Inputting the stitch length (Ⓐ)**

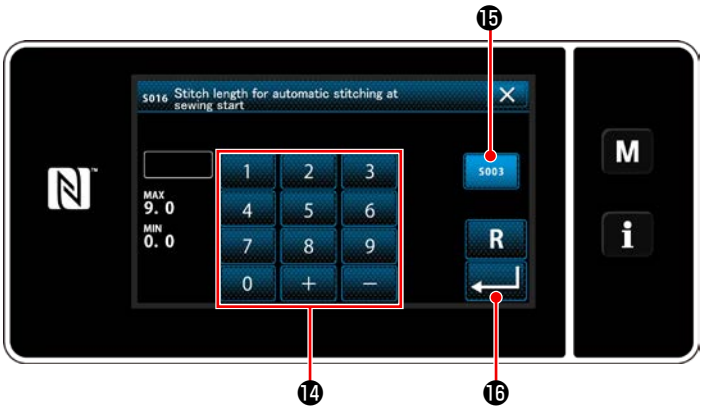

<Stitch length input screen>

1) When 6.0 Ⓐ is pressed, the stitch length input screen is displayed.
2) When S003 ⓯ is pressed, the stitch length can be entered.
3) Input the stitch length with numeric keypad ⓮. (0.0 to 9.0)

* In the case ⓯ is selected, the stitch length will be the one employed for normal feed stitching section.

4) When ⓰ is pressed, the value you have input is confirmed and the screen returns to the "sewing-start reverse feed stitching data edit screen".

- **Inputting the correction value for reverse-feed stitch length (Ⓑ)**

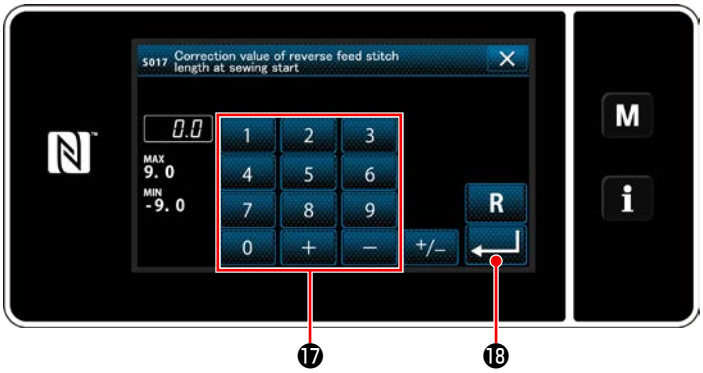

<Reverse-feed stitch length correction value input screen>

1) When 0.0 Ⓑ is pressed, the reverse-feed stitch length correction value input screen is displayed.
2) Input a correction value with numeric keypad ⓱ .
   (-9.0 to 9.0)
3) When ↵ ⓲ is pressed, the value you have input is confirmed and the screen returns to the "sewing-start reverse feed stitching data edit screen".

- **Inputting the presser foot pressure (Ⓒ)**

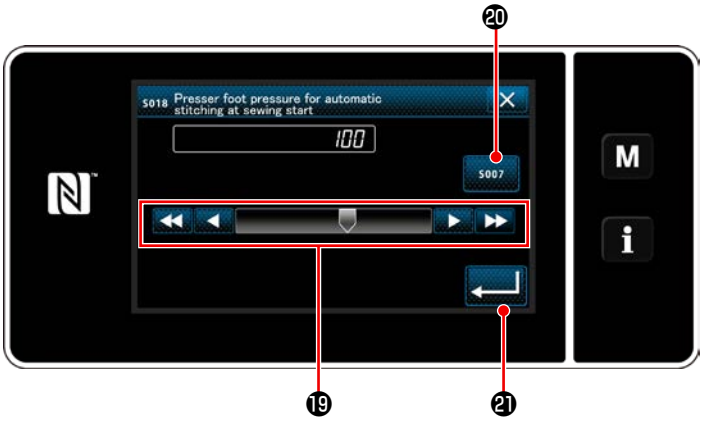

<Presser foot pressure input screen>

1) Press 100 Ⓒ. Then, the presser foot pressure input screen is displayed.
2) Input a presser foot pressure with button ⓳ .
   (-20 to 200)

* In the case ⓴ is selected, the pressure foot pressure you input will be the pressure which is employed for the normal feed stitching section.

3) When ↵ ㉑ is pressed, the value you have input is confirmed and the screen returns to the "sewing-start reverse feed stitching data edit screen".

- **Inputting the sewing speed (Ⓓ)**

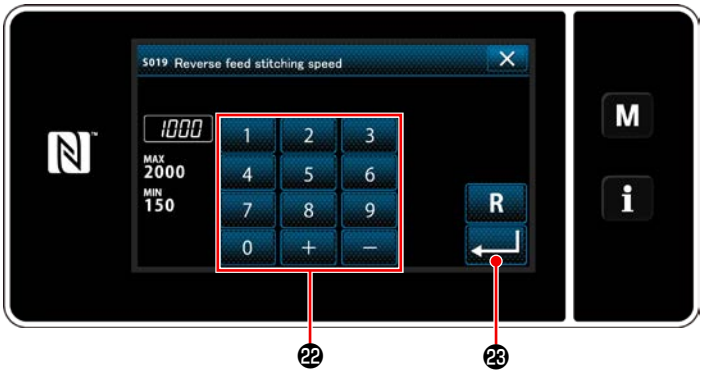

<Sewing speed input screen>

1) When 1000 Ⓓ is pressed, the sewing speed input screen is displayed.
2) Input a sewing speed with numeric keypad ㉒.
   (150 to 2000)
3) When ↵ ㉓ is pressed, the value you have input is confirmed and the screen returns to the "sewing-start reverse feed stitching data edit screen".

Stitch-by-stitch reverse feed stitching speed and the temporary stop function at each corner section of the sewing pattern

	Default value	Recommended value
Stitch pitch (mm)	3 to 6	7 to 8
Reverse feed stitching speed (sti/min)	1000	600
Temporary stop function at each corner section of the sewing pattern	0 (OFF)	1 (ON)

- **Setting the needle thread tension function (Ⓔ)**

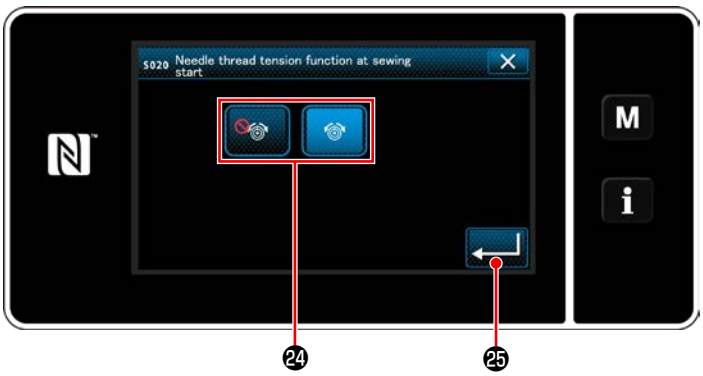

<Needle thread tension function selection screen>

1) When Ⓔ is pressed, the needle thread tension function selection screen is displayed.
2) Select the status (enable/disable) of the needle thread tension function with button ㉔ .
3) When ㉕ is pressed, the value you have input is confirmed and the screen returns to the "sewing-start reverse feed stitching data edit screen".

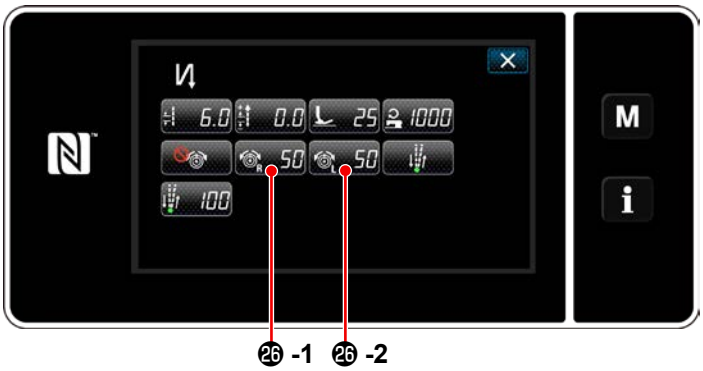

* If you have selected (disable) in 2), needle thread tension edit buttons 50 ㉖ **-1** (right) and 50 ㉖ **-2** (left) will be displayed on the reverse-feed stitching (at the start of sewing) data edit screen.

- **Setting the pause and stitch alignment function (Ⓕ)**

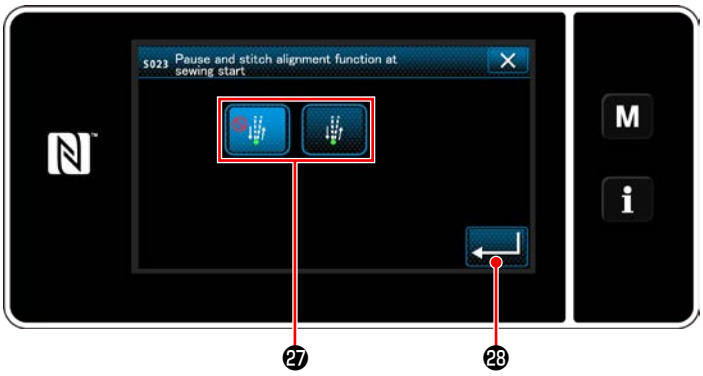

<Pause and stitch alignment function selection screen>

1) When Ⓕ is pressed, the pause and stitch alignment function selection screen is displayed.
2) Select the status (enable/disable) of the pause and stitch alignment function with button ㉗ .
3) When ㉘ is pressed, the value you have input is confirmed and the screen returns to the "sewing-start reverse feed stitching data edit screen".

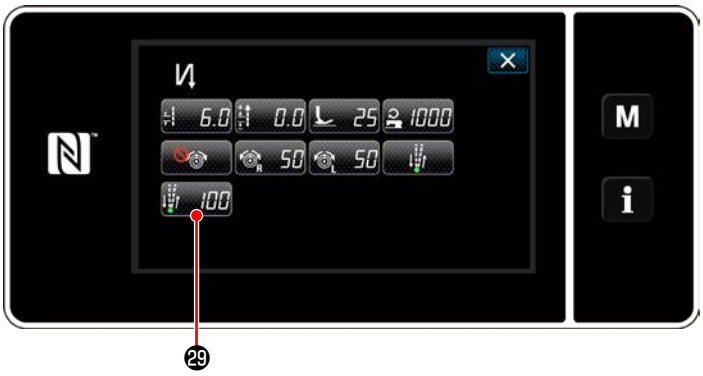

* In the case (enable) is selected in the aforementioned item number 2, pause and stitch alignment temporary-stop time edit button 100 ㉙ is displayed on the sewing-start reverse feed stitching data edit screen.

④ **Applying the changed items**

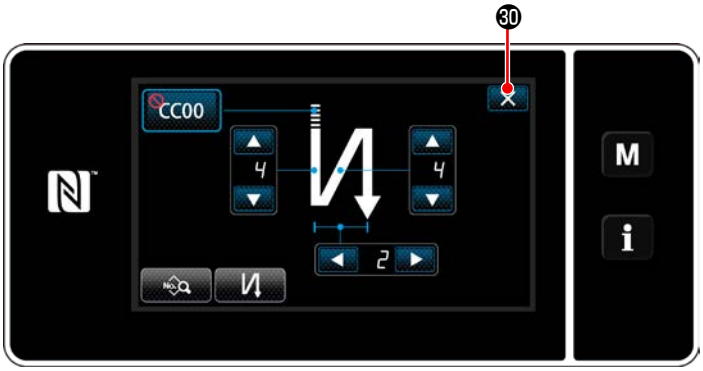

<Sewing-start reverse-feed stitching screen (maintenance personnel mode)>

Press ✕ ㉚ to confirm the aforementioned operation and return the current screen to the sewing screen.

* **Normal-/reverse-feed stitch needle entry points alignment at the time of automatic reverse feed stitching**

When the sewing speed or stitch pitch is changed, the normal- and reverse-feed stitch needle entry points may not be aligned at the time of automatic reverse feed stitching.
In such a case, correct the needle entries by changing the ON/OFF timing of the automatic reverse feed stitching.
In the case the stitch pitch is large and correction of the timing is difficult, it is recommended to decrease the reverse feed sewing speed or use the temporary stop function at each corner section of the sewing pattern.

Normal- and reverse-feed stitches may need to be adjusted according to the stitch pitch to be used. Refer to the Engineer's Manual for how to adjust the stitches.

■ How to align needle entry points of the reverse feed stitching with those of the normal feed stitching
Carry out "correction of the timing of the reverse feed stitching" according to the difference between the needle entry points of the reverse feed stitching and those of the normal feed stitching.

① U051: Reverse feed stitching at the beginning of sewing (ON correction) is carried out.
(Refer to **"6-7. Memory switch data" p. 100** for the operation procedure.)

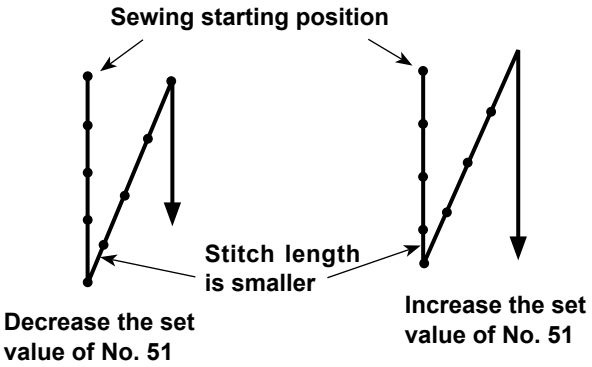

② U052: Reverse feed stitching at the beginning of sewing (OFF correction) is carried out.
(Refer to **"6-7. Memory switch data" p. 100** for the operation procedure.)

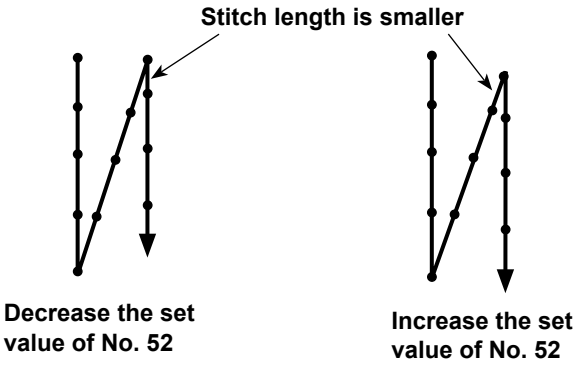

③ U053: Reverse feed stitch at the end of sewing (OFF correction) is carried out.
(Refer to **"6-7. Memory switch data" p. 100** for the operation procedure.)

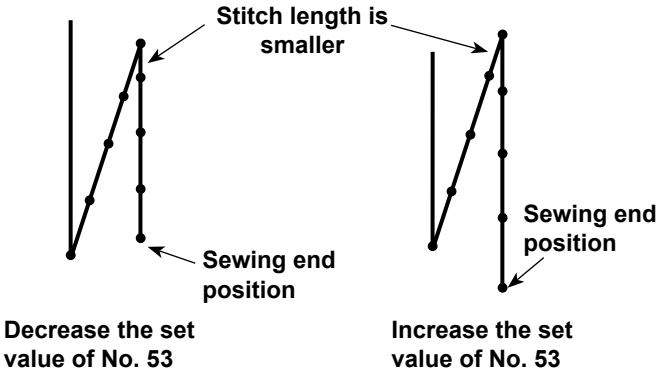

6-2-4. Reverse feed stitching (at end) pattern

A stitch shape of reverse feed stitching (at end) is set by following the steps of procedure described below.

(1) Enabling the reverse feed stitching (at end) pattern

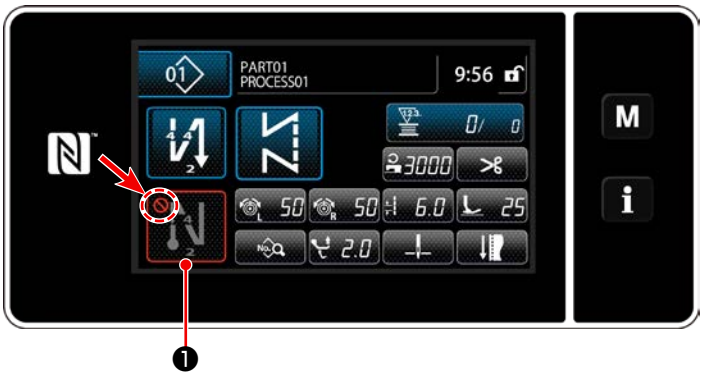

The sewing-end reverse feed stitching pattern can be operated when the sewing-end reverse feed stitching function is placed in the ON state (🚫 mark is not displayed).
If this function is placed in the OFF state press the sewing end reverse feed stitch button to switch off 🚫 mark display to enable the sewing-end reverse feed stitching function.

(2) Changing the number of stitches and pitch of reverse feed stitching (at end) pattern

① **Displaying the edit screen for reverse feed stitching (at end)**

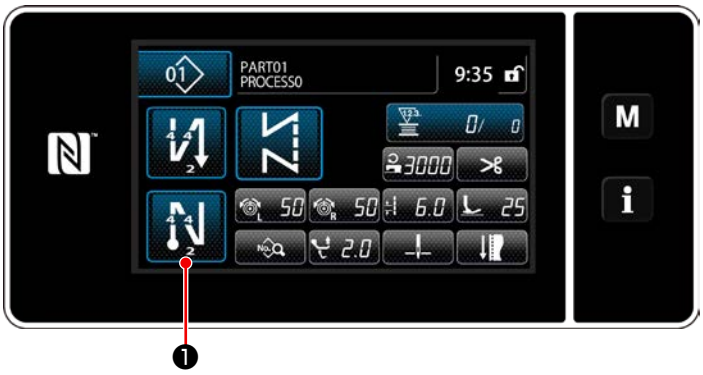

Keep ❶ held pressed for one second.

The reverse feed stitching (at end) edit screen is displayed.

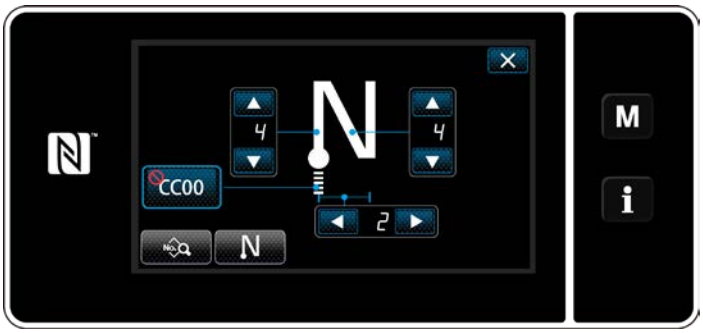

<Sewing-end reverse feed stitching edit screen>

* From the next item number and beyond, set the function items in the same manner as the functions for sewing-start reverse feed stitching. (Refer to **"6-2-3. Reverse feed stitching (at start) pattern" p. 55**.)

6-2-5. Editing the sewing patterns

(1) Edit method (in the case free stitching, constant-dimension sewing or multi-layer stitching is selected)

* In the case polygonal-shape stitching is selected, refer to **"9-2. Setting up the polygonal-shape stitching" p. 121**.

① Displaying the sewing data edit screen

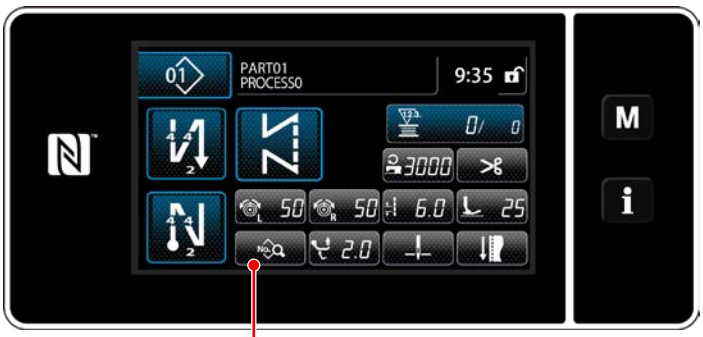

❶ **<Sewing screen>**

On the sewing screen which is displayed in the case free stitching, constant-dimension sewing or multi-layer stitching is selected, press ❶ to display the sewing data edit screen.

② Editing the sewing pattern

<Sewing data edit screen>

On this screen, the pattern functions can be edited separately.
Refer to **"6-2-6. List of pattern functions" p. 69** for the function items that can be edited.
Change the respective items and press ↵ to confirm the change.
Press ✕ ❷ to display the sewing screen.

③ Performing sewing using the edited sewing pattern

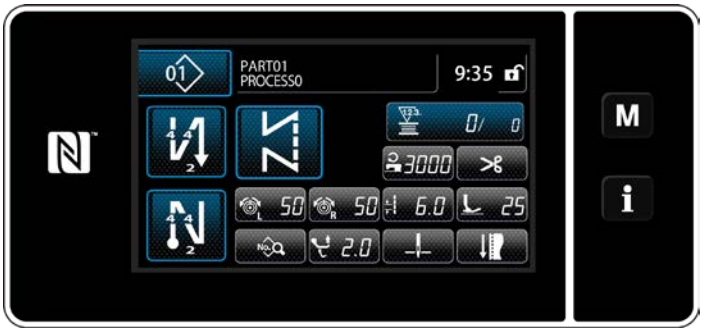

<Sewing screen>

Data you have changed is displayed on the screen.

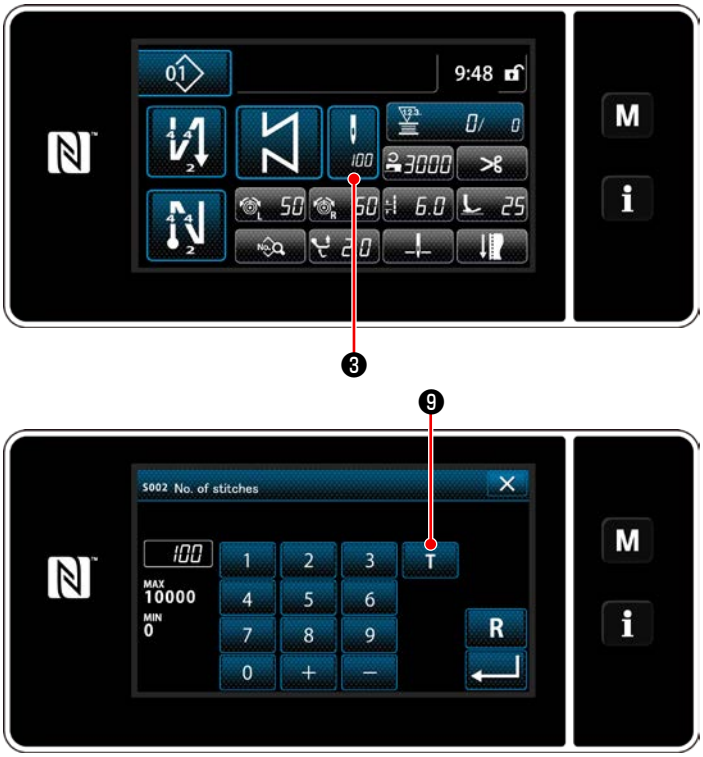

<Number of stitches input screen>

* In the case a constant-dimension sewing pattern is selected, the number of stitches input screen is displayed by pressing ❸ at the time of setting the number of stitches. (Only in the case the number of stitches can be changed)

When T ❾ is pressed, the teaching function is turned ON.

Refer to **"6-2-7. Teaching function" p. 77** for the teaching function.

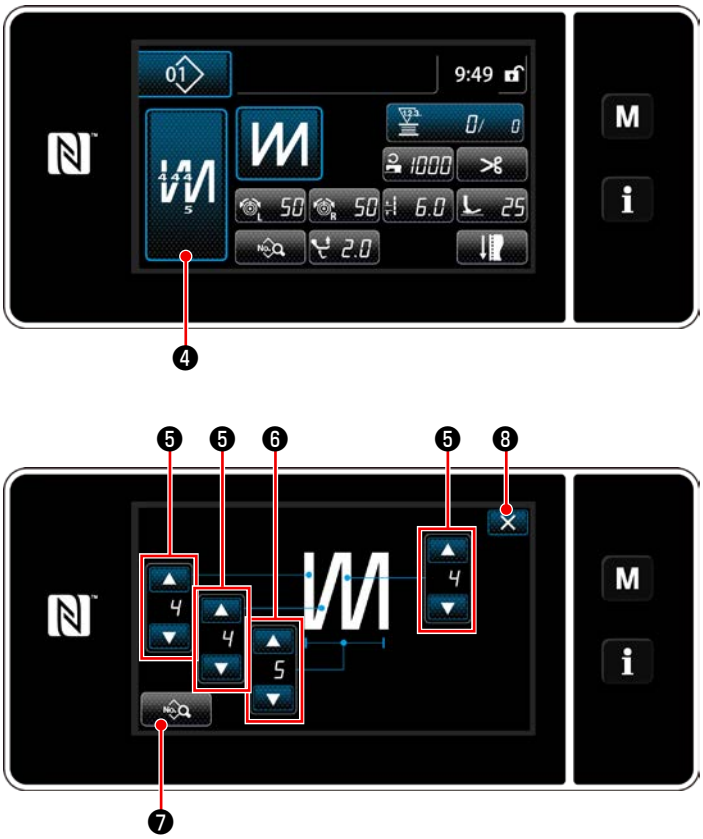

<Multi-layer stitching edit screen>

* When ❹ is pressed while selecting the multi-layered sewing pattern, the multi-layered sewing pattern edit screen is displayed.

1) Set the number of stitches with ❺.
2) Set the number of times of double reverse feed stitching with ❻.
3) Multi-layered sewing data can be edited by pressing ❼.
4) Press ❽ to confirm the set value and return the current screen to the sewing screen.

(2) Sewing adjustment mode

Sewing performance can be checked using the sewing conditions you have changed before finalizing the sewing conditions.

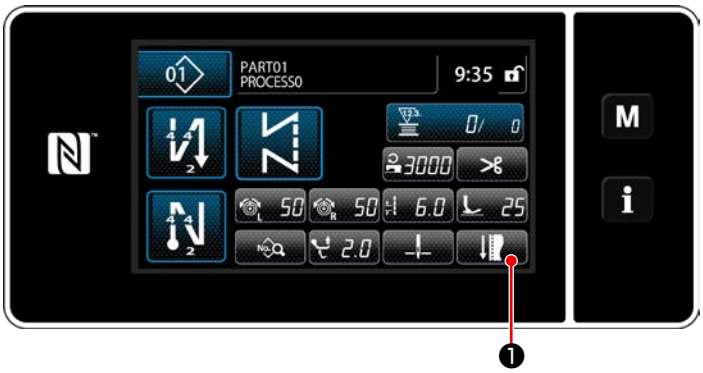

<Sewing screen (Maintenance personnel mode)>

1) Press ❶ on the sewing screen under the maintenance personnel mode.
The "sewing adjustment mode screen" is displayed.

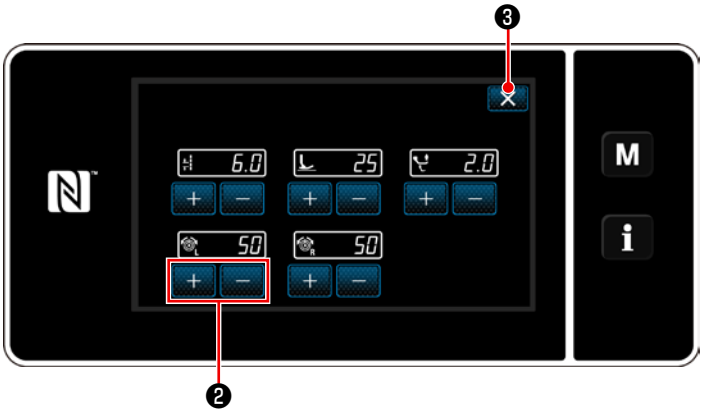

<Sewing adjustment mode screen>

2) Change the sewing conditions with ❷ . Then, check the sewing performance.

Below-stated sewing conditions can be adjusted.

- 6.0 : Stitch length
- 25 : Presser foot pressure
- 2.0 : Alternating vertical movement amount
- 50 : Needle thread tension, left
- 50 : Needle thread tension, right

3) The operation is completed by pressing ❸ . Then, the current screen returns to the sewing screen under the maintenance personnel mode.

(3) Adjusting the lower stop position

WARNING :
The needle bar moves during adjustment of this item. Be careful not to place your fingers under the needle.

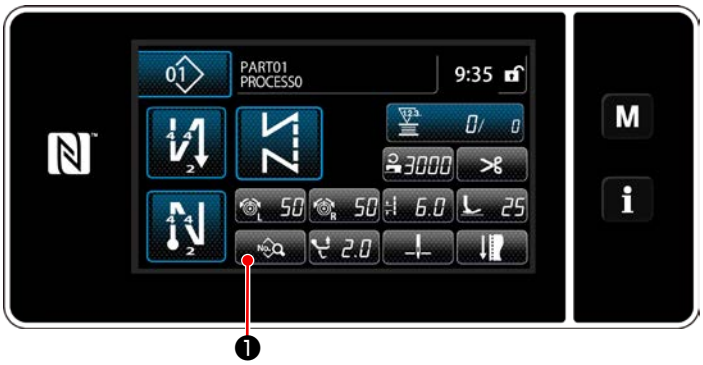

<Sewing screen (Maintenance personnel mode)>

1) Press ❶ on the sewing screen under the maintenance personnel mode.
The "sewing data edit screen" is displayed.

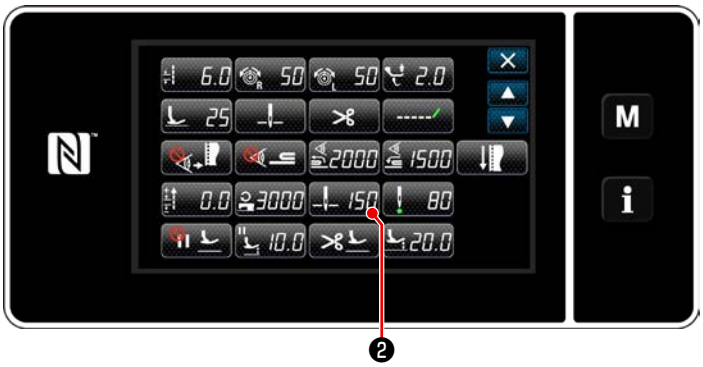

<Sewing data edit screen>

2) Press ❷ .
The "needle bar lower stop position setting screen" is displayed.

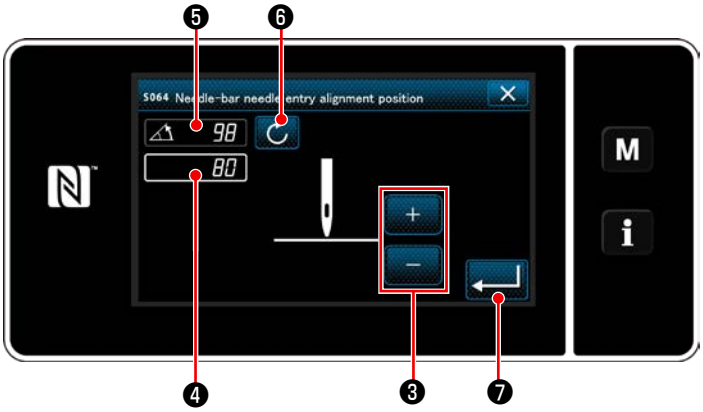

<Needle bar lower stop position setting screen>

3) Adjust the lower stop position of the needle bar following two different adjustment procedures described below.

[Adjustment with the + / - key]

Adjust the needle bar position with ❸ .
(Value shown in display ❹ will change accordingly.)

[Adjustment with the main-shaft angle]
Adjust the needle bar position by turning the main shaft with jog dial ⑧ etc. (Value shown in display ❺ will change accordingly.)
Press ❻ to reflect the adjustment value to ❹ .

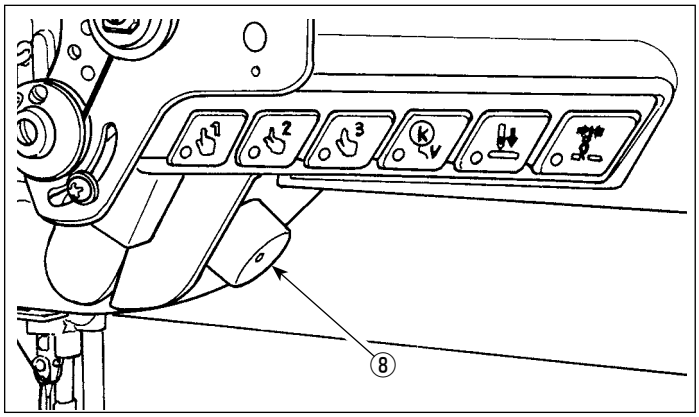

4) The operation is confirmed by pressing ❼ . Then, the screen returns to the "sewing data edit screen".

Caution
If you have changed the lower stop position of needle bar, check to make sure that the needle bar does not interfere with the intermediate presser when you operate the presser lifter. If they interfere with each other, change the amount of lift of the presser foot. (Refer to "6-2-6. List of pattern functions" p.69)

(4) Adjusting the needle entry alignment position of the needle bar

WARNING :
The needle bar moves during adjustment of this item. Be careful not to place your fingers under the needle.

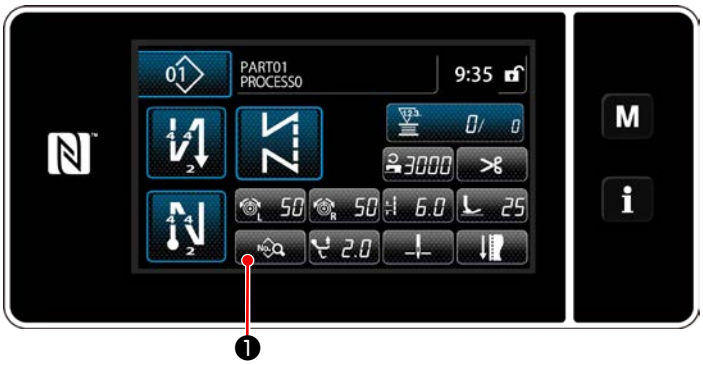

<Sewing screen (Maintenance personnel mode)>

1) Press ❶ on the sewing screen under the maintenance personnel mode.
The "sewing data edit screen" is displayed.

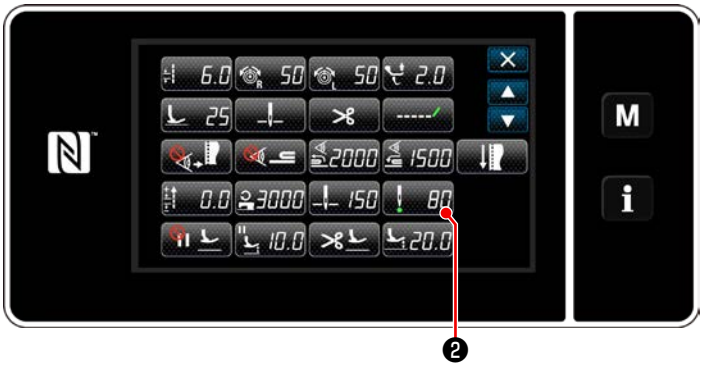

<Sewing data edit screen>

2) Press ❷.
The "needle-bar needle entry alignment position setting screen" is displayed.

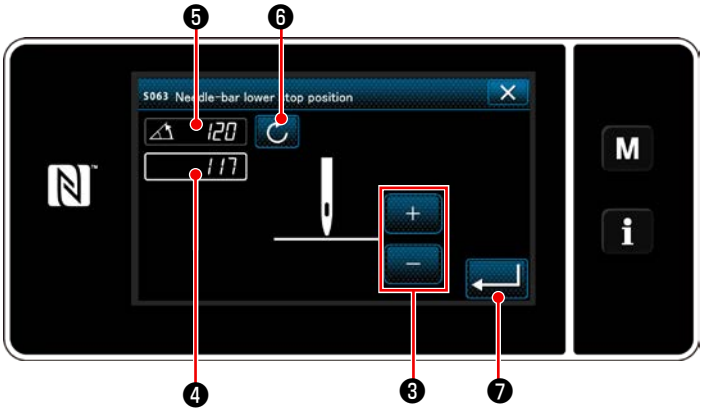

<Needle-bar needle entry alignment position setting screen>

3) From this item number and beyond, adjust the needle bar position in the same manner as **"(3) Adjusting the lower stop position" p. 67**.

6-2-6. List of pattern functions

(1) Setting items under the pattern sewing mode

	Data No.	Item name	Unit of change	Input range			
	S001	Shape		Free	Constant dimension	Multi-layered	Polygonal shape
	S002	Number of stitches	1 stitch	—	1 to 10000	1 to 15	—
	S003	Stitch length	0.1 mm	-9.0 to 9.0 / Custom pitch No.1 to 20			—
	S004	Needle thread tension, left	1	0 to 140			—
	S005	Needle thread tension, right	1	0 to 140			—
	S006	Alternating vertical movement amount	0.5 mm	0.5 to 9.0			—
	S007	Presser foot pressure	1	-20 to 200			—
	S008	Suspended ruler position	0.1 mm	0.0 to 60.0			—
Reverse feed stitching at the beginning of sewing	S010	Stitch ON/OFF at the beginning of sewing		ON / OFF		—	ON / OFF
	S011	Shape of reverse feed stitching at the beginning of sewing		: Reverse feed stitching : Condensation : Condensation custom		—	: Reverse feed stitching : Condensation : Condensation custom
	S012	Number of times of reverse feed stitching at the beginning of sewing		1 to 10		—	1 to 10
	S013	Custom stitching at the beginning of sewing		Condensation custom No.1 to 9		—	Condensation custom No.1 to 9
	S014	Number of stitches A	1 stitch	0 to 99			
	S015	Number of stitches B	1 stitch	0 to 99			

	Data No.	Item name	Unit of change	Input range		
	S016	→ Stitch length	0.1 mm	0.0 to 9.0 / Common setting S003	—	0.0 to 9.0 / Common setting S003
	S017	→ Reverse-feed stitch length correction value	0.1 mm	-9.0 to 9.0	—	-9.0 to 9.0
	S018	→ Presser foot pressure	1	-20 to 200 / Common setting S007	—	-20 to 200 / Common setting S007
	S019	→ Reverse feed stitching speed at the beginning of sewing	50 sti/min	150 to 2000		
	S020	→ Needle thread tension Common setting ON/OFF		: OFF : ON	—	: OFF : ON
	S021	→ Needle thread tension, left	1	0 to 140	—	0 to 140
	S022	→ Needle thread tension, right	1	0 to 140	—	0 to 140
	S023	→ Pause and stitch alignment function		: OFF : ON		
	S024	→ Stop time for pause and stitch alignment function	10 ms	0 to 1000		
Reverse feed stitching at the end of sewing	S030	Reverse feed stitching ON/ OFF at the end of sewing		ON / OFF	—	ON / OFF
	S031	Shape of reverse feed stitching at the end of sewing		: Reverse feed stitching : Condensation : Condensation custom	—	: Reverse feed stitching : Condensation : Condensation custom
	S032	Number of times of reverse feed stitching at the end of sewing		1 to 10	—	1 to 10
	S033	Custom stitching at the end of sewing		Condensation custom No.1 to 9	—	Condensation custom No.1 to 9

	Data No.	Item name	Unit of change	Input range		
	S034	Number of stitches C	1 stitch	0 to 99		
	S035	Number of stitches D	1 stitch	0 to 99	—	0 to 99
	S036	→ Stitch length	0.1 mm	0.0 to 9.0 / Common setting S003	—	0.0 to 9.0 / Common setting S003
	S037	→ Reverse-feed stitch length correction value	0.1 mm	-9.0 to 9.0	—	-9.0 to 9.0
	S038	→ Presser foot pressure	1	-20 to 200 / Common setting S007	—	-20 to 200 / Common setting S007
	S039	→ Reverse feed stitching speed at the end of sewing	50 sti/min	150 to 2000	—	150 to 2000
	S040	→ Needle thread tension Common setting ON/OFF		: OFF : ON	—	: OFF : ON
	S041	→ Needle thread tension, left	1	0 to 140	—	0 to 140
	S042	→ Needle thread tension, right	1	0 to 140	—	0 to 140
	S043	→ Pause and stitch alignment function		: OFF : ON	—	: OFF : ON
	S044	→ Stop time for pause and stitch alignment function	10 ms	0 to 1000	—	0 to 1000
	S050	Needle bar stop position		: Stop with the needle up : Stop with the needle down	—	—
	S051	Needle clamp ON/OFF		: OFF : ON		
	S052	Thread trimmer ON/OFF		: OFF : ON		

	Data No.	Item name	Unit of change	Input range			
	S053	One shot		—	: OFF : ON	—	—
	S054	When the preset number of stitches is reached, automatic thread trimming is conducted simultaneously		—	: OFF : ON	—	: OFF : ON
	S055	Condensation stitching during thread trimming (shorter-thread remaining)		: OFF	: ON		
	S057	Material edge sensor ON/ OFF		: OFF : ON		—	—
	S058	Multi-layered section sensor ON/OFF		: OFF : ON		—	—
	S059	Sensor value to turn ON the multi-layered section changeover function	1	1000 to 3000		—	—
	S060	Sensor value to turn OFF the multi-layered section changeover function	1	1000 to 3000		—	—
	S061	Reverse-feed stitch length correction value	0.1 mm	-9.0 to 9.0			
	S062	Sewing speed limit	50 sti/min	150 to U096		—	—
	S063	Needle bar: Lower stop position	1 deg	100 to 300		—	—
	S064	Needle entry alignment position of the needle bar	1 deg	0 to 359		—	—
	S065	Presser foot lifting during intermediate stop:		: OFF : ON		—	—

	Data No.	Item name	Unit of change	Input range		
	S066	Presser foot lifting height during intermediate stop:	0.5 mm	0.0 to 20.0	—	—
	S067	Presser foot lifting after thread trimming:		: OFF : ON		—
	S068	Presser foot lifting height after thread trimming	0.5 mm	0.0 to 20.0		—
		One-touch changeover 1 - 3			—	—
	S071 S081 S091	→ Sewing speed limit	10 sti/min	150 to U096 / Common setting S062	—	—
	S072 S082 S092	→ Stitch length	0.1 mm	-9.0 to 9.0 / Common setting S003	—	—
	S073 S083 S093	→ Needle thread tension, left	1	0 to 140 / Common setting S004	—	—
	S074 S084 S094	→ Needle thread tension, right	1	0 to 140 / Common setting S005		
	S075 S085 S095	→ Alternating vertical movement amount	0.5 mm	0.5 to 9.0 / Common setting S006	—	—
	S076 S086 S096	→ Presser foot pressure	1	-20 to 200 / Common setting S007	—	—
	S078 S088 S098	→ Suspended ruler position	0.1 mm	0.0 to 60.0 / Common setting S008	—	—
	S079 S089 S099	→ Number of stitches to turn OFF changeover	1 stitch	0 to 200	—	—
		One-touch changeover 4 (detection of multi-layered section)			—	—
	S101	→ Sewing speed limit	10 sti/min	150 to U096 / Common setting S062	—	—
	S102	→ Stitch length	0.1 mm	-9.0 to 9.0 / Common setting S003	—	—
	S103	→ Needle thread tension, left	1	0 to 140 / Common setting S004	—	—
	S104	→ Needle thread tension, right	1	0 to 140 / Common setting S005	—	—

	Data No.	Item name	Unit of change	Input range		
	S105	→ Alternating vertical movement amount	0.5 mm	0.5 to 9.0 / Common setting S006	—	—
	S106	→ Presser foot pressure	1	-20 to 200 / Common setting S007	—	—
	S108	→ Suspended ruler position	0.1 mm	0.0 to 60.0 / Common setting S008	—	—
	S109	→ Number of stitches to turn OFF changeover	1 stitch	0 to 200	—	—

*** Refer to "6-2-8. One-touch utility changeover function" p. 79 for the detailed function of one-touch changeover.**

(2) Setting items for the polygonal-shape stitching steps

Data No.	Item name	Unit of change	Input range
Step 01			
S201	Step changeover		: Number of stitches : One-touch switch : Multi-layered part
S203	Sensor value to change over the step	1	1000 to 3000
S204	Number of stitches (seam length in mm)	1 stitch	1 to 10000
S205	Stitch length (the number of stitches per inch, the number of stitches per 3 cm)	0.1 mm	-9.0 to 9.0 / Custom pitch No.1 to 20
S206	Needle thread tension, left	1	0 to 140
S207	Needle thread tension, right	1	0 to 140
S208	Alternating vertical movement amount	0.5 mm	0.5 to 9.0
S209	Presser foot pressure	1	-20 to 200
S210	Suspended ruler position	0.1 mm	0.0 to 60.0
S211	Needle bar stop position at the time of pause		: Stop with the needle up : Stop with the needle down
S212	Needle entry alignment position of the needle bar		: OFF : ON
S213	Presser foot lifting during intermediate stop:	0.5 mm	0.0 to 20.0

Data No.	Item name	Unit of change	Input range
S214	Needle bar stop position at the time of stop		: Stop with the needle up : Stop with the needle down : Thread trimming : Continuity
S215	Stop and presser foot lifting		: OFF : ON
S216	Lifting height of presser foot when the sewing machine stops	0.5 mm	0.0 to 20.0
S217	One shot		: OFF : ON
S218	Material end sensor on/off		: OFF : ON
S219	Sewing speed	50 sti/min	150 to U096
Step 02			
		:	
Step 30			

* Setting items and the input range are same as those of step 01.
* Step numbers can be set to Step 30.

6-2-7. Teaching function

This is the function that enables entry of the number of stitches of a sewing pattern using the actual number of stitches sewn.
This function screen can be displayed from the sewing data edit screen.

* The teaching function can be used in the case the "constant-dimension sewing" or "polygonal-shape stitching" is selected.

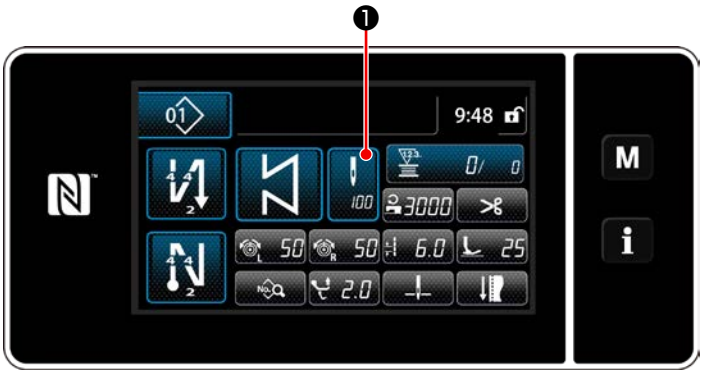

<Sewing screen (constant-dimension sewing) (Maintenance personnel mode)>

Press ❶ on the sewing data list screen. Then, the number of stitches input screen is displayed.

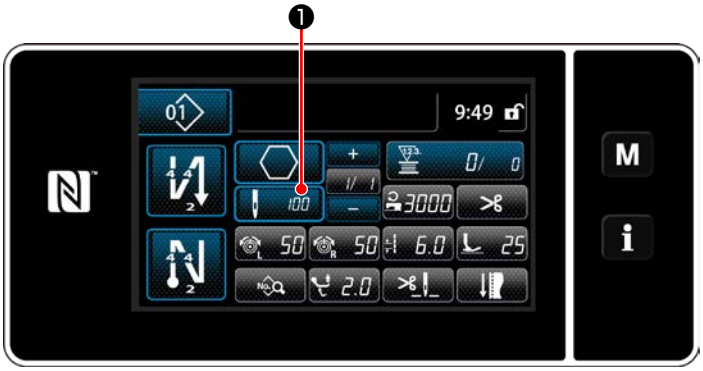

<Sewing screen (polygonal-shape stitching) (Maintenance personnel mode)>

(1) How to set (constant-dimension sewing)

<Number of stitches input screen>

① **Turning ON the teaching function**
Press T ❷ to turn ON the teaching function.

② **Starting teaching**
The input value is set to 0 (zero). Depress the pedal to start sewing. Count the number of stitches until the sewing machine stops.

③ **Confirming the data entered under the teaching mode**
Confirm the content of teaching by carrying out thread trimming.
Return the current screen to the sewing screen (maintenance personnel mode).

(2) How to set (polygonal-shape stitching)

① Turning ON the teaching function

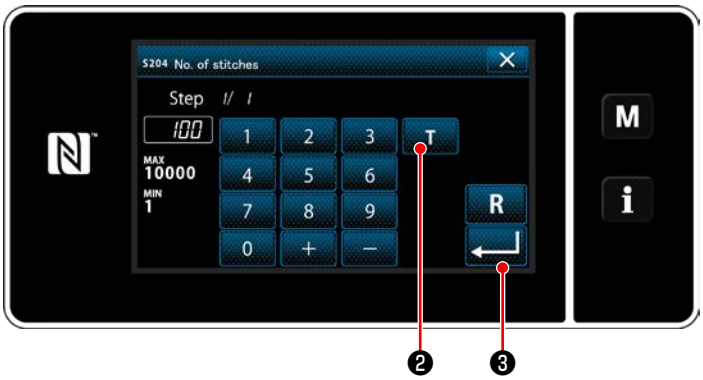

<Number of stitches input screen>

Press T ❷ to turn ON the teaching function.

② Start teaching, and confirm data on a step-by-step basis

The input value is set to 0 (zero). Depress the pedal to start sewing. Count the number of stitches until the sewing machine stops.

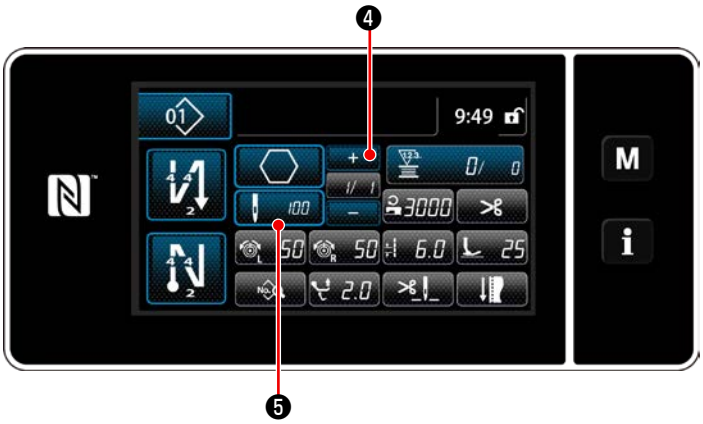

Press ❹ to confirm the teaching data on the current step. Press ❺ to change the current screen to the number of stitches input screen for the next step.
If no further step to be registered is present, this operation will be disabled.
Perform sewing until the end of step is reached (the last stitch is sewn). Then, perform thread trimming to confirm the teaching content.

6-2-8. One-touch utility changeover function

In the case the one-touch changeover function is assigned to the custom switch, the stitch length, sewing speed, etc. can be changed over by pressing the custom switch.
Four different one-touch changeover functions can be set from 1 to 4.

Data that is changed over with the one-touch changeover function
· Stitch length
· Needle thread tension
· Alternating vertical movement amount
· Presser foot pressure
· Sewing speed

Refer to **"4-11. Custom switch" p. 41**.

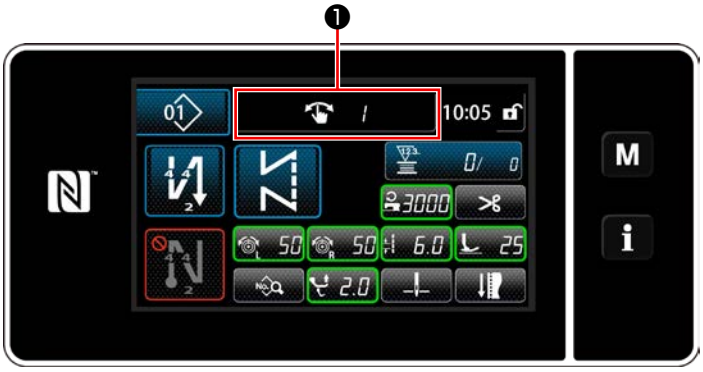

The display of the target data changes and the number (1 to 4) of the one-touch change over function is displayed in ❶ while the one-touch changeover function works.

6-2-9. Registration of a new sewing pattern

A newly-created sewing pattern is registered by following the steps of procedure described below.

① Selecting the new-pattern creating function

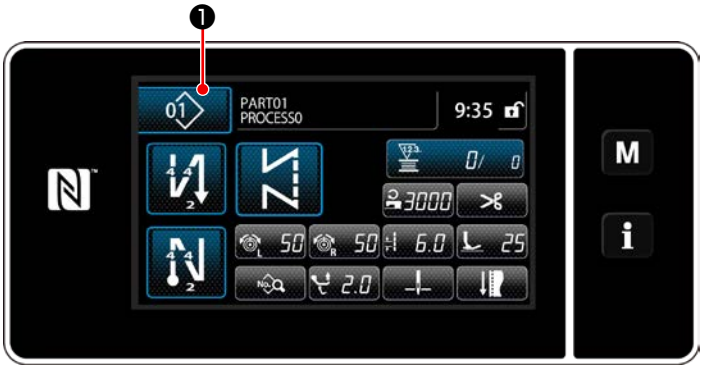

1) Press 01 ❶ to display the sewing pattern management screen.

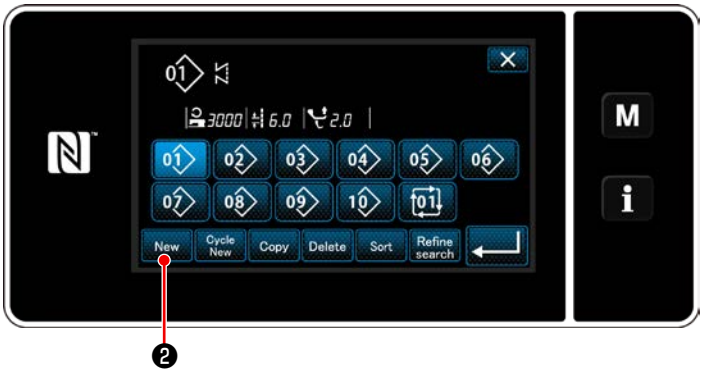

<Sewing pattern management screen>

2) Press New ❷ .

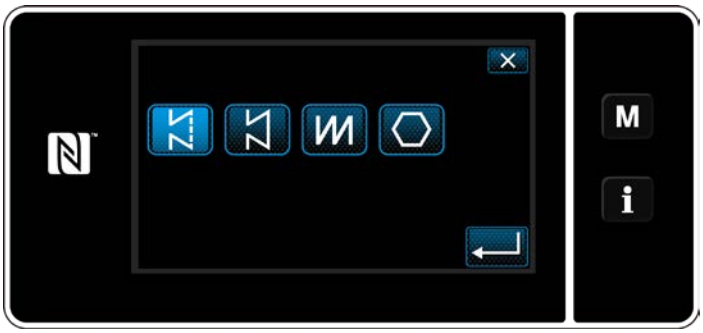

3) Select the desired sewing shape (free stitching, constant-dimension sewing, multi-layer stitching, polygonal shape stitching).

② **Confirming the data on the created sewing pattern**

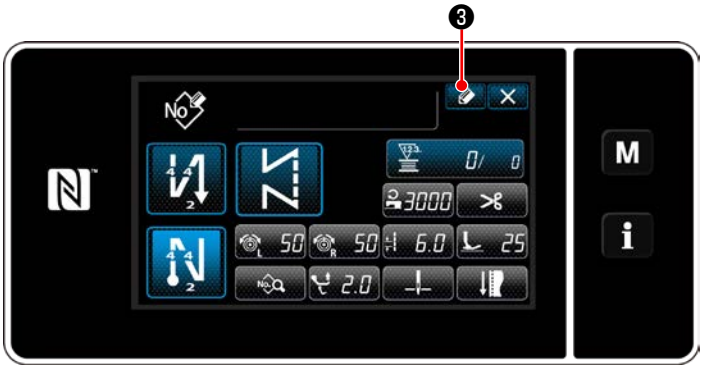

1) Press ❸ to display the sewing pattern No. registration.

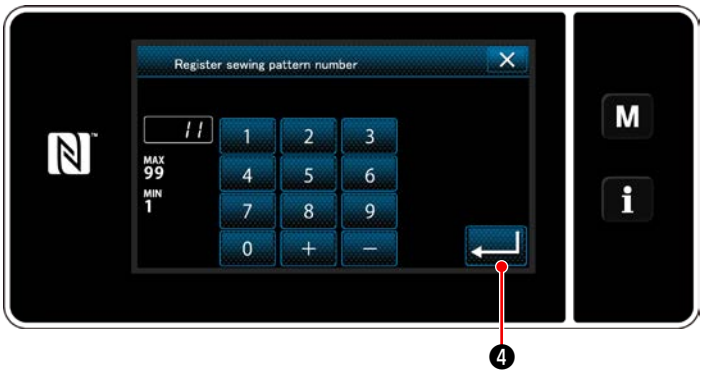

2) Enter the pattern number to be registered using the numeric keypad.
3) Press ❹ to confirm the pattern number you have entered.
The sewing pattern management screen is displayed.

6-2-10. Copying a pattern

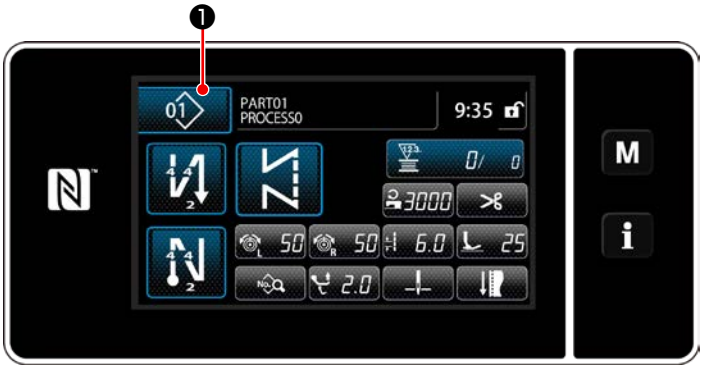

1) Press 01 ❶ to display the sewing pattern management screen.

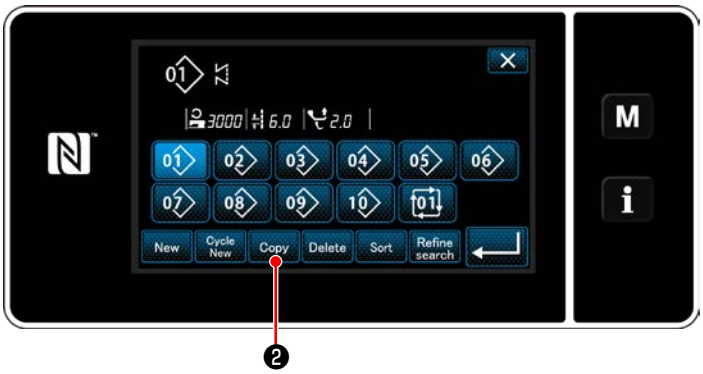

<Sewing pattern management screen>

2) Press Copy ❷ .

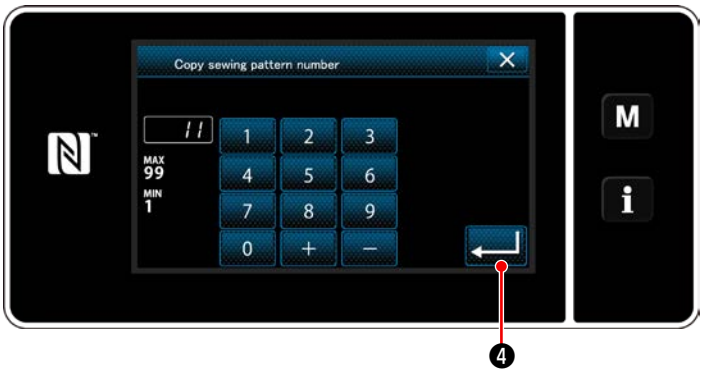

3) Input a copy pattern number with the numeric keypad.
4) Press ↵ ❹ to confirm the pattern number you have entered.
The sewing pattern management screen is displayed.

6-2-11. Narrow-down function

It is possible to select and display sewing pattern(s) which include target characters from the sewing patterns stored in memory by entering the target characters such as the product number, process or comment. This function can be used both under the operator mode and maintenance personnel mode.

① Selecting the new-pattern creating function

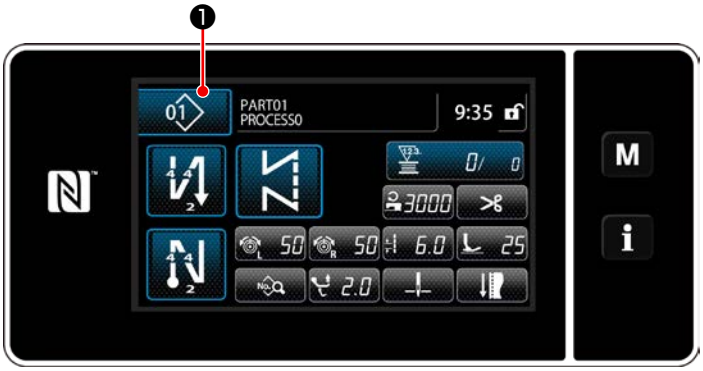

<Sewing screen (maintenance personnel mode)>

1) Press 01 ❶ to display the sewing pattern management screen.

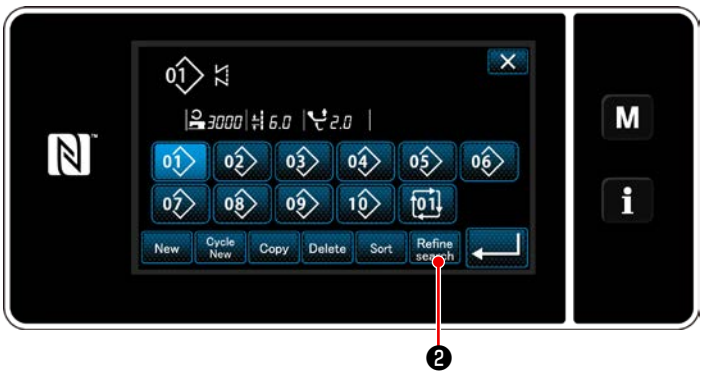

<Sewing pattern management screen>

2) Press Refine search ❷ .

② Select the target pattern to be narrowed down

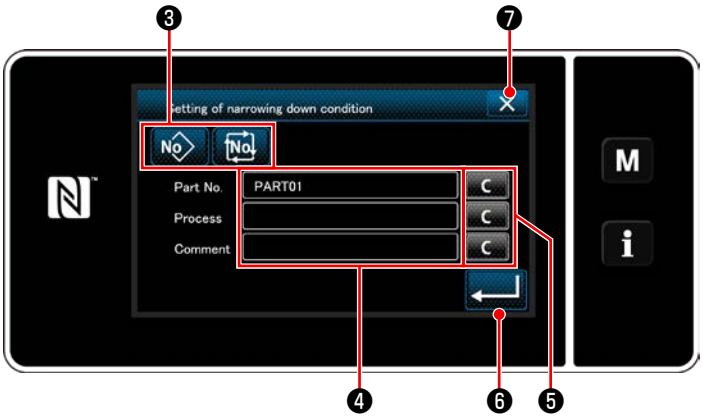

<Narrow-down condition setting screen>

1) Select sewing patterns from which a desired pattern is narrowed down using button ❸.
2) The character input screen is displayed by pressing ❹.
   It is possible to enter a character(s) which is to be used for narrow-down operation with the character string button.
3) The entered characters are erased by pressing button C ❺.
4) The "Sewing pattern management screen" containing only the patterns which include the entered character(s) are displayed by pressing ❻.
5) Narrow-down operation is not carried out by pressing ❼. Then, the "Sewing pattern management screen" is displayed.

* In the case characters are entered for two or more items on the narrow-down condition setting screen, only the patterns which satisfy all the entered conditions are displayed. For cycle sewing patterns, a comment is only used as the narrow-down condition.

6-3. Counter function

This function counts sewing in the predetermined unit and gives a visible alarm on the screen when the preset value is reached.

6-3-1. Displaying the sewing screen under the counter display mode

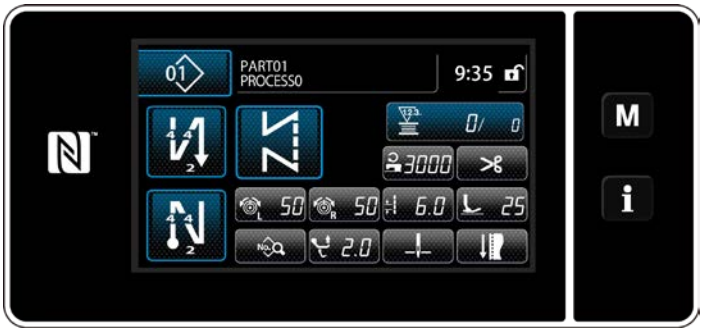

Three different types of the counter are available, i.e., the bobbin thread counter, the sewing counter and the pitch time counter.

6-3-2. Types of the counter

	Bobbin thread counter The bobbin thread counter adds one to its current value every time the sewing machine sews 10 stitches. When the preset value is reached, the count-completion screen is displayed. * Refer to **"6-3-4. How to reset the count-completion state" p. 89**.
	Sewing counter The sewing counter adds one to its current value every time one stitch shape is sewn. When the preset value is reached, the count-completion screen is displayed. * Refer to **"6-3-4. How to reset the count-completion state" p. 89**.
	Pitch time counter The pitch time counter adds one to its current value every time one stitch shape is sewn. When the type of counter is set to the pitch time counter, is displayed on the counter setting screen (refer to **"6-3-3. How to set the counter" p. 86**). When the period of time set with is reached, the counter adds "1 (one)" to the target value (unit: sec).

6-3-3. How to set the counter

① Selecting the counter setting

1) Display the mode screen by pressing **M** ❶.

<Mode screen>

2) Select the "Counter setting".

② Setting the type of counter, current value of counter and preset value for counter

The sewing counter and the bobbin counter should be set following the same procedure.

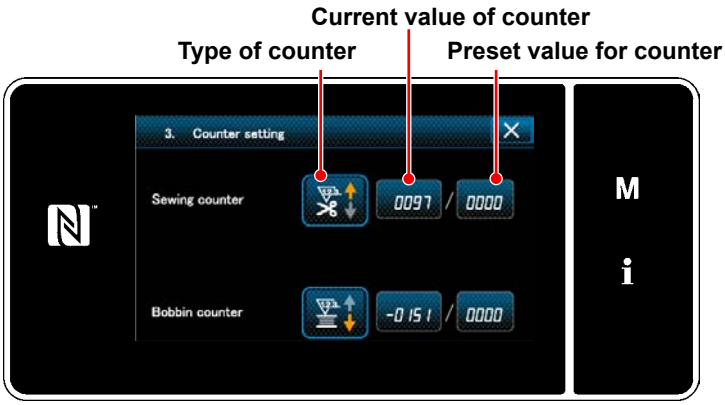

<Counter setting screen>

1) The counter setting screen is displayed to enable setting.
2) Press the button of the desired item. Then, the change screen corresponding to that item is displayed.

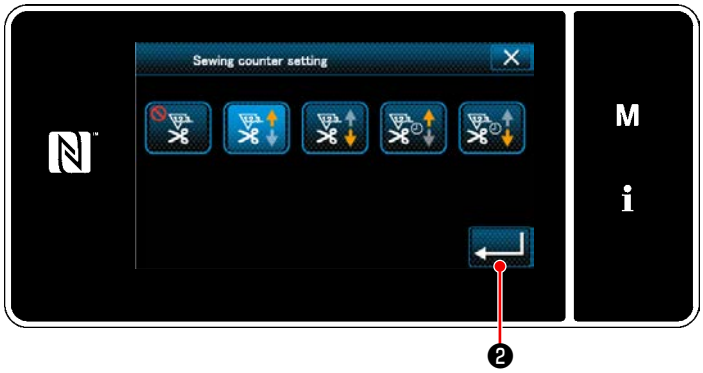

<Counter type screen>

1) Select the desired type of counter.
2) Press ❷ to confirm the type of counter you have selected.

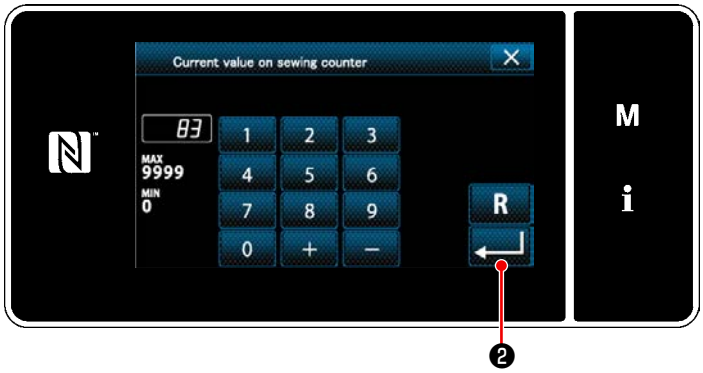

<Current counter value screen>

1) Select the current counter value.
2) Enter with the numeric keypad.
3) Press ❷ to confirm the type of counter you have selected.

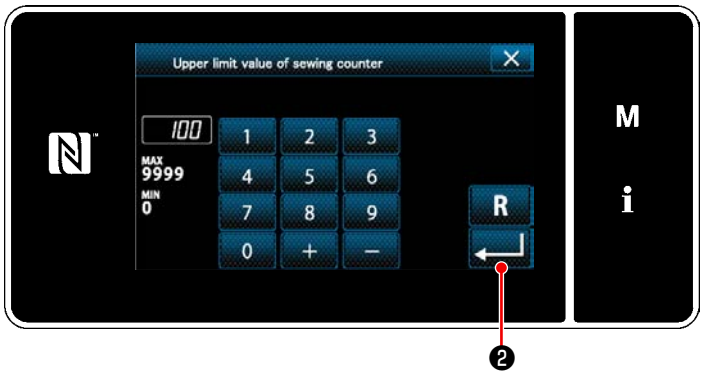

<Counter set value screen>

1) Select the counter set value.
2) Enter with the numeric keypad.
3) Press ❷ to confirm the type of counter you have selected.

Bobbin thread counter	
	UP counter (adding method): The bobbin thread counter adds one to its current value every time the sewing machine sews 10 stitches. When the current value reaches the preset value, the count-completion screen is displayed.
	DOWN counter (subtracting method): The bobbin thread counter subtracts one from its current value every time the sewing machine sews 10 stitches. When the current value becomes 0 (zero), the count-completion screen is displayed.
—	**Disuse of counter:** The bobbin thread counter counts nothing even when the sewing machine performs sewing. The count-completion screen is, therefore, not displayed.

Sewing counter	
	UP counter (adding method): The counter adds one to its current value every time the sewing machine sews one stitch shape. When the current value reaches the preset value, the count-completion screen is displayed.
	DOWN counter (subtracting method): The counter subtracts one from its current value every time the sewing machine sews one stitch shape. When the current value becomes 0 (zero), the count-completion screen is displayed.
—	**Disuse of counter:** The sewing counter counts nothing even when the sewing machine performs sewing. The count-completion screen is, therefore, not displayed.

Pitch time counter	
	UP counter (adding method): The counter adds one to its current value every time the sewing machine sews one stitch shape.
	DOWN counter (subtracting method): The counter subtracts one from its current value every time the sewing machine sews one stitch shape.
—	**Disuse of counter:** The sewing counter counts nothing even when the sewing machine performs sewing. The count-completion screen is, therefore, not displayed.

③ **Confirming the data entered**

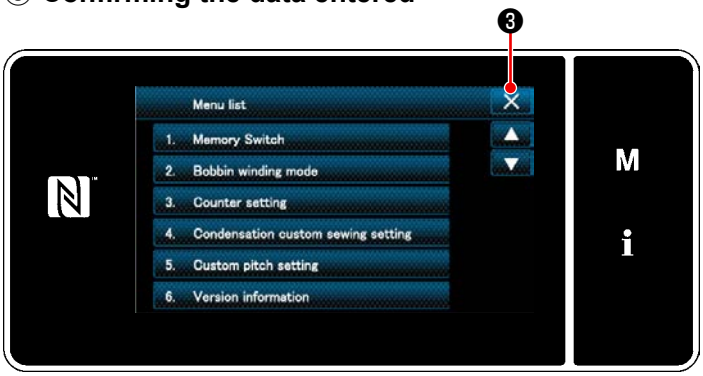

<Mode screen>

Confirm the data on counter setting items you have entered. Then, press ❸ to return the screen to the mode screen.

When you press ❸ again, the screen is returned to the sewing screen.

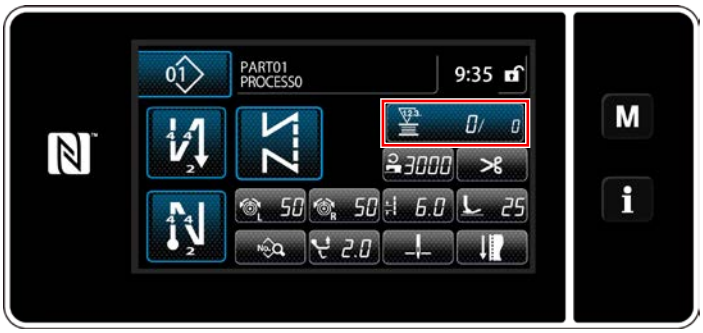

<Sewing screen (counter)>

The data on the counter function entered is displayed.

6-3-4. How to reset the count-completion state

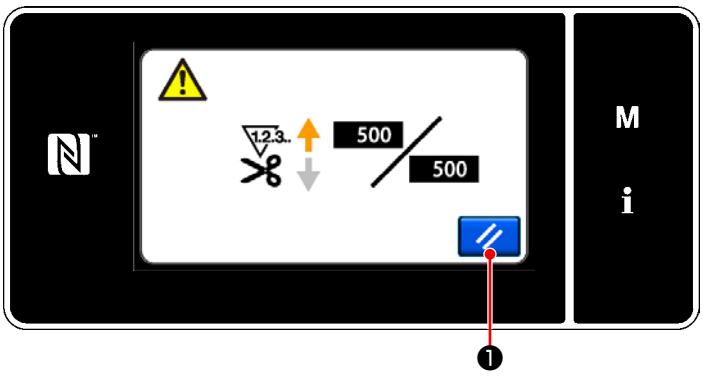

<Count-completion screen>

When the predetermined conditions are satisfied during sewing, the count-completion screen is displayed.

The counter is reset by pressing ❶.

Then, the mode is returned to the sewing mode. In this mode, the counter starts counting again.

6-4. Simplified chart of panel displays

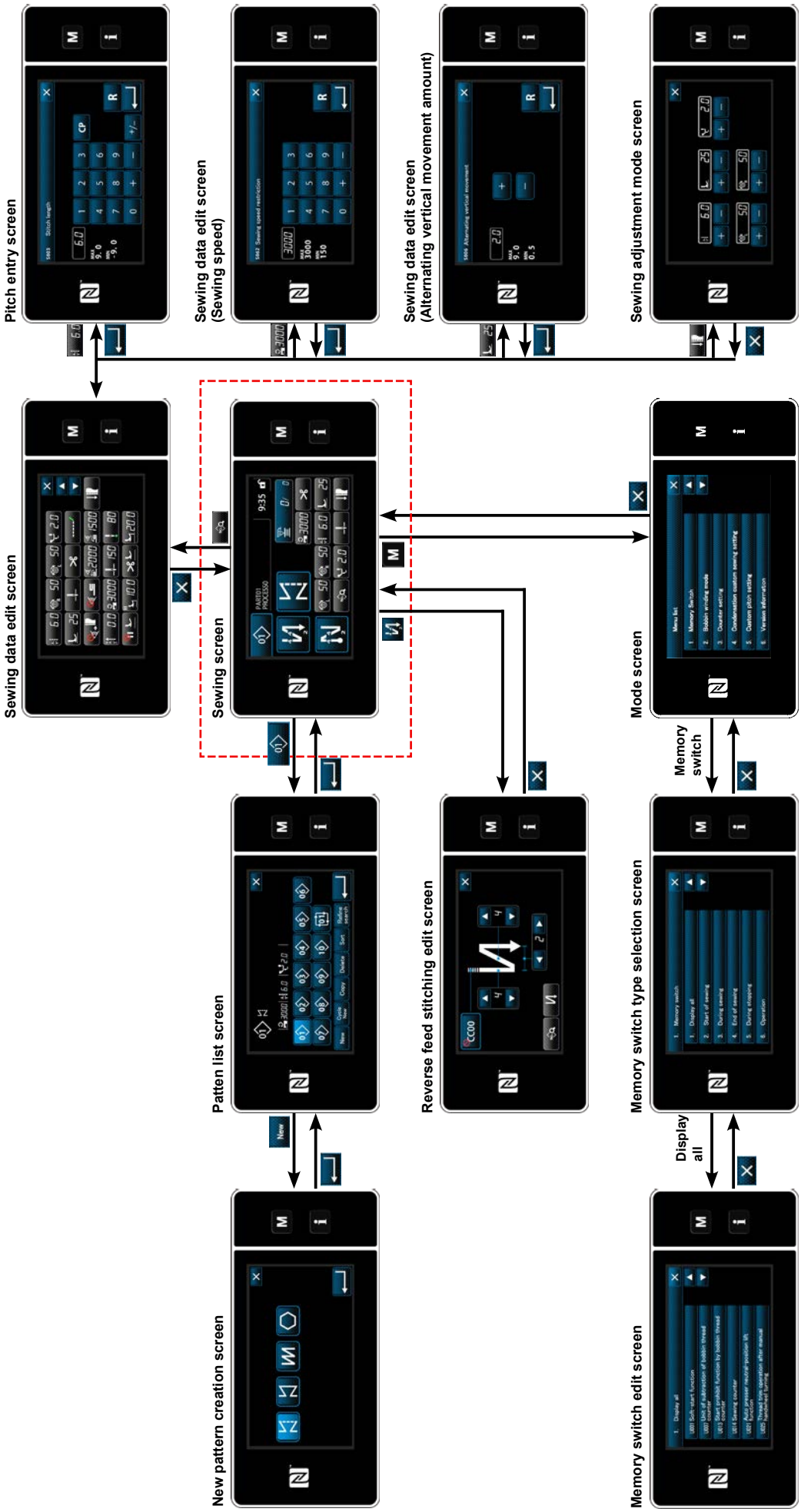

6-5. List of memory switch data

No.	Item	Setting range	Unit
U001	**Soft-start function** The initial value differs with the machine head. (0: OFF)	0 to 9	Stitch
U007	**Bobbin thread count-down unit** 0: 10 stitches / 1: 15 stitches / 2: 20 stitches	0 to 2	Stitch
U013	**Bobbin thread count stop function** 0: Sewing machine start prohibition function is disabled even when the counter completes counting (negative value). 1: When the counter completes counting, the sewing machine start after thread trimming is prohibited. 2: When the counter completes counting, the sewing machine temporarily stops and the start of sewing machine after thread trimming is prohibited. * Note that the prohibition function is disabled in the case the initial value of counter is 0 (zero).	0 to 2	—
U014	**Sewing count function** 1: Automatic sewing counter / 2: Sewing counter switch input	1 to 2	—
U021	**Presser foot lift when the pedal is in its neutral position** 0: Disabled / 1: Enabled / 2: Enabled only when the presser foot is at its lower position / 3: Alternating vertical movement by depressing the back part of pedal	0 to 3	—
U025	**Operation after manual turning (thread trimming)** This memory switch is used for setting the thread trimmer operation after the sewing machine has moved from its upper/lower stop position by manual turning of handwheel. 0: Permitted / 1: Prohibited	0 to 1	—
U030	**Middle-of-sewing reverse feed stitching function** Midpoint-of-sewing reverse feed stitching function is set. 0: Without the midpoint-of-sewing reverse feed stitching function / 1: With the mid-point-of-sewing reverse feed stitching function	0 to 1	—
U031	**Number of stitches of middle-of-sewing reverse feed stitching** Number of midpoint-of-sewing reverse feed stitches is set.	1 to 19	Stitch
U032	**Condition of enabling middle-of-sewing reverse feed stitching while sewing machine is at rest** Midpoint-of-sewing reverse feed stitching function enable condition 0: Disabled when the swing machine is at rest / 1: Enabled when the sewing machine is at rest	0 to 1	—
U033	**Thread trimming activated by middle-of-sewing reverse feed stitching** Thread trimming function after the completion of midpoint-of-sewing reverse feed stitching is set. 0: Without automatic thread trimming function / 1: With automatic thread trimming function	0 to 1	—
U035	**Minimum speed of the pedal** The initial value varies with the machine head.	150 to 250	sti/min
U036	**Thread trimming sewing speed** The initial value varies with the machine head.	100 to 250	sti/min
U037	**Speed during soft start** The number of revolutions set with this memory switch is given precedence even if it is lower than the lowest speed by pedal. The initial value varies with the machine head. (0:OFF) One needle: 170 sti/min Two needles: 200 sti/min	100 to 3500	sti/min

No.	Item	Setting range	Unit
U038	**Speed during one-shot stitching** The maximum number of revolutions during soft start differs with the machine head.	100 to 3500	sti/min
U039	**Start position of rotation** Set start position from neutral pedal potision. (Pedal Stroke)	10 to 1000	—
U040	**Start position of acceleration** Set accelerating position from neutral pedal position. (Pedal Stroke)	10 to 1000	—
U041	**Start position of lifting of presser foot** Set work clamp lift position from neutral pedal position. (Pedal Stroke)	-500 to -10	—
U042	**Start position of lowering of presser foot** Set work clamp fall position from neutral pedal position. (Pedal Stroke)	10 to 500	—
U043	**Start position of thread trimming** Set thread triming starting position from neutral pedal position. (Pedal Stroke)	-1000 to -100	—
U044	**Position that maximum sewing speed is reached** Set maximum speed reaching position from neutral pedal position. (Pedal Stroke)	10 to 15000	—
U045	**Pedal neutral-position correction value** Set neutral position of pedal sensor.	-150 to 150	—
U047	**Presser-foot lift finishing position** The position to which the presser foot goes up when the back part of the pedal is depressed to its first step. (1st-step spring position)	-1000 to -100	—
U048	**Function of lifting the presser foot by depressing the pedal** Whether or not the presser-foot lifting operation is carried out by depressing the back part of pedal is set. 0: No operation / 1: Operation	0 to 1	—
U049	**Presser foot lowering time** Time to lower the presser foot is set.	0 to 500	ms
U051	**Correction of turning-ON of reverse feed stitching (at start)**	-50 to 50	Degree
U052	**Correction of turning-OFF of reverse feed stitching (at start)**	-50 to 50	Degree
U053	**Correction of turning-OFF of reverse feed stitching (at end)**	-50 to 50	Degree
U054	**Standby time until the presser foot starts going up** Time to be elapsed from the moment the pedal is depressed to the 1st step to the moment the presser foot starts going up.	0 to 200	ms
U056	**Reverse-rotation needle-up after thread trimming** The initial value differs with the machine head. 0: Reverse-rotation needle-up is not performed / 1: Reverse-rotation needle-up is performed	0 to 1	—
U058	**Needle bar home position retaining function** The retaining function retains the needle bar at upper or lower stop position. The initial value varies with the machine head. 0: Disabled / 1: Enabled; Weak retaining force / 2: Enabled; Medium retaining force / 3: Enabled; Strong retaining force	0 to 3	—
U059	**Selection of revere feed stitching (at start) operation** 0: By manually operating the pedal, etc. / 1: According to the preset reverse feed sewing speed	0 to 1	—
U060	**Stop after reverse feed stitching (at start)** The stop function stops the sewing machine temporarily regardless of the operating status of the pedal. 0: OFF / 1: ON	0 to 1	—
U064	**Sewing speed at the start of reverse feed stitching (at end)**	150 to 1000	sti/min

No.	Item	Setting range	Unit
U068	**Presser foot lifting operation changeover** The presser foot lifting operation when depressing the back part of pedal is changed over. 0: 2-step operation / 1: Manual operation depending on the pedal stroke when the back part of pedal is depressed	0 to 1	—
U087	**Pedal acceleration characteristic** 0: Standard / -1 to -10: Low-frequency low acceleration / 1 to 10: Low-frequency high acceleration	-10 to 10	—
U089	**Needle bar stop position when the power is turned ON** 0: Upper stop position/ 1: Reverse-rotation needle up position	0 to 1	—
U090	**Initial-start upper-position stopping function** 0: The sewing machine stops with its needle up after checking the panel. 1: The machine automatically stops with its needle up.	0 to 1	—
U092	**Speed reducing function for reverse feed stitching at beginning of sewing** Speed reduction function after the completion of start reverse feed stitching is set. 0: Speed is not reduced. / 1: Speed is reduced	0 to 1	—
U093	**Needle up/down correction switch adding function** Needle up/down correction switch operation after the power-ON or after thread trimming is set. 0: Normal / 1: One-stitch correction after thread trimming / 2: Needle entry alignment function after thread trimming 3: In addition to the operation 2, the needle entry alignment is performed by lowering the presser foot and the needle lifting function works by operating the thread trimmer	0 to 3	—
U096	**Maximum sewing speed** The initial value differs with the machine head.	150 to 3500	sti/min
U120	**Main shaft reference angle correction** The main shaft reference signal angle (0 degree) is corrected with the value set using this memory switch.	-60 to 60	Degree
U121	**Upper position angle correction** The position at which the sewing machine stops with its needle up is corrected.	-15 to 15	Degree
U122	**Lower position angle correction** The position at which the sewing machine stops with its needle down is corrected.	-15 to 15	Degree
U150	**Automatic knee-lifter function** 0: Without function, 1: With function	0 to 1	—
U151	**Automatic knee-lifter operation starting position adjustment** Corrects the presser-operating knee lift position	-2000 to 1000	—
U152	**Automatic knee-lifter maximum position adjustment** Corrects the knee lift position when presser is located at the highest position.	-200 to 1000	—
U164	**Pedal input high-speed switch function** 0: Normal pedal / 1: To be used as the high-speed switch	0 to 1	—
U173	**Thread clamp ON retaining time** Period of time to retain the thread clamp in the ON state.	1 to 60	S
U179	**Needle bar home position retaining limit time** Retaining time for the control to keep the needle bar at its home position (0: No limit)	0 to 10	m
U182	**Sewing counter stopping function** 0: The sewing machine does not stop even when the sewing counter completes counting. 1: When the counter completes counting, the sewing machine start after thread trimming is prohibited. * Note that the prohibition function is disabled in the case the initial value of counter is 0 (zero).	0 to 1	—
U183	**Number of times of thread trimming for sewing counter**	1 to 20	—

No.	Item	Setting range	Unit
U194	**Thread tension changeover setting when lifting the presser foot** 0: OFF / 1: Normally ON / 2: Only after thread trimming / 3: Only during the immediate stop	0 to 3	—
U195	**Thread tension when lifting the presser foot (right)**	0 to 200	—
U196	**Thread tension when lifting the presser foot (left)**	0 to 200	—
U199	**Pedal giving priority to sewing machine for standing work** The switch which is given priority when the pedal is used for sewing machine for standing work is set. 0: Start switch is given priority / 1: Start switch is not given priority	0 to 1	—
U201	**Thread tension correction (bobbin thread remaining amount)** **Final correction amount** This memory switch is used to set the needle thread tension correction amount when the remaining amount of bobbin thread is minimized.	0 to 100	%
U202	**Thread tension correction (bobbin thread remaining amount)** This memory switch is used to set the remaining amount of bobbin thread to start correction of the needle thread tension.	50 to 200	%
U273	**Start enable/disable setting when lifting the presser foot** Enable/disable of input for starting the sewing machine after lowering the presser foot which is placed in its upper position is changed over. 0: Enable / 1: Disable	0 to 1	—
U280	**Number of condensation stitches at the end of sewing before shorter-thread remaining type thread trimmer operates** When the shorter-thread remaining function is placed in ON, this memory switch is used for setting the number of condensation stitches to be sewn before thread trimming.	1 to 9	Stitch
U285	**Thread clamp sewing function** Selects the thread clamp function ON or OFF.	0 to 1	—
U286	**Thread-clamp sewing speed** Sewing speed to be employed in the case of operating the thread clamp is set.	100 to 3000	sti/min
U288	**Thread clamp ON angle** The degree of an angle of the main shaft at which the thread clamp is turned ON at the beginning of sewing is set.	180 to 290	Degree
U289	**Thread clamp OFF angle** The degree of an angle of the main shaft at which the thread clamp is turned OFF at the beginning of sewing is set.	210 to 359	Degree
U290	**Thread-clamp AK operating time** Time to turn ON the AK which operates at the time of clamping the thread is set.	0 to 50	ms
U293	**Thread-clamp sewing speed cancelling angle** The degree of an angle of the main shaft at which the sewing speed employed when the thread clamp operates is cancelled is set. * This setting is enabled in the case the thread clamp operates.	0 to 720	Degree
U294	**Thread-clamp initial suction time** The low-current time during the initial state of suction for the thread clamp.	0 to 200	ms
U295	**Thread clamp presser pressure 0** Set the initial presser pressure to 0 when the thread clamp is ON.	0 to 1	—
U385	**Jog dial function** Main shaft operation by the rotation of jog dial. 0: OFF / 1: ON	0 to 1	—
U388	**Automatic travel to the upper position by the jog dial** Function of automatically bringing the main shaft to its upper position while the main shaft is rotated by the jog dial. 0: OFF / 1: ON	0 to 1	—

No.	Item	Setting range	Unit
U400	**Panel operation mode** This memory switch is used for specifying the mode of the sewing screen that is displayed at the time of startup. 0: Maintenance personnel mode / 1: Operator mode	0 to 1	—
U401	**Input unit of stitch length** 0: Stitch length (mm) / 1: Number of stitches per inch 2: Number of stitches in 3 cm	0 to 2	—
U402	**Automatic lock time** The sewing machine is automatically locked in the case the operation panel is not operated for a predetermined period of time.	0 to 300	Second
U403	**Auto-OFF of back light** Back light of the panel is automatically turned off in the case the operation panel is not operated for a certain period of time.	0 to 20	
U404	**Selection of part number and process / comment display** This memory switch is used for specifying either the part number/process is displayed or comment is displayed on the sewing screen. 0: Part number/process / 1: Comment	0 to 1	—
U406	**Language selection** 0: Not yet selected / 1: Japanese / 2: English / 3: Simplified Chinese / 4: Additional language edit mode: 0 → 1	0 to 4	—
U407	**Operating sound of panel** 0: OFF / 1: ON	0 to 1	—
U410	**Input unit of the number of stitches** Unit of seam length to be used when entering the seam length in a sewing pattern data such as in the case of the constant dimension sewing is set. 0: Number of stitches / 1: Length (mm)	0 to 1	—

6-6. List of errors

Error code	Description of error	Cause	Item to be checked
E000	Execution of data initialization (This is not an error.)	• The existing control box has been removed and a new one is mounted. • In the case the initialization operation is executed.	This is not a failure.
E007	Motor overload	• In the case the machine head is locked. • In the case of sewing extra-heavy weight material that exceeds the guaranteed material thickness. • In the case the motor fails to rotate. • In the case of the motor or driver failure.	• Check whether the pulley is entangled with thread. • Check whether the motor output connector (4P) has loosened. • Check whether the motor can be turned smoothly by hand.
E009	Overtime of solenoid energization	• In the case the length of solenoid energizing time has exceeded the assumed one.	
E011	Media is not inserted	• In the case no media is inserted.	• Turn the power OFF and check for a media.
E012	Read error	• In the case data stored on the media cannot be read.	• Turn the power OFF and check for a media.
E013	Write error	• In the case data cannot be written on the media.	• Turn the power OFF and check for a media.
E014	Write protect	• In the case the media is placed in the write-prohibition state.	• Turn the power OFF and check for a media.
E015	Format error	• In the case formatting of the media cannot be carried out.	• Turn the power OFF and check for a media.
E016	External media over-capacity	• In the case the capacity of media is not enough.	• Turn the power OFF and check for a media.
E019	File size over	• In the case of attempting to read the custom pitch data or condensation custom data which exceeds the maximum permissible data size into the memory of sewing machine from the USB thumb drive.	• Turn the power OFF and check the USB thumb drive.
E022	File undetected	• In the case of attempting to read a file which is not stored in the USB thumb drive into the operation panel.	
E032	File compatibility error	• In the case the file is not compatible.	• Turn the power OFF and check for a media.
E071	Slip-off of the motor connector	• In the case the motor connector has slipped off.	• Check for looseness and slip-off of the motor output connector.
E072	Motor overload when the thread trimmer operates	• Same as E007.	• Same as E007.
E079	Overload operation error	• Load applied to the main shaft motor is excessively large.	
E081	Feed driving motor lock	• In the case the feed driving motor is locked.	• Check whether the feed driving motor operates smoothly.
E204	USB insertion	• In the case the sewing machine is started up without removing the USB thumb drive.	• Remove the USB thumb drive.

Error code	Description of error	Cause	Item to be checked
E205	ISS buffer capacity runout warning	• Buffer for storing ISS data will soon be filled to its capacity. If the buffer is used continuously, the stored data will be automatically erased on FIFO basis.	• Output the ISS data.
E220	Warning against shortage of grease	• When the predetermined number of stitches is reached.	• Add grease to the specified points of sewing machine and reset the error.
E221	Grease-shortage error	• In the case the sewing machine cannot continue sewing since the predetermined number of stitches is reached.	• Add grease to the specified points of sewing machine and reset the error.
E302	Head-tilt detection error (When the safety switch operates)	• In the case the Tilt detection switch is turned ON when the power to the sewing machine remains ON.	• Check whether the machine head is tilted before turning OFF the power switch (The sewing machine operation is prohibited for the sake of safety.)
E303	Meniscus sensor error	• In the case the meniscus sensor signal cannot be detected.	• Check for a break in the motor encoder connector.
E402	Deletion disabled error	• In the case of attempting to delete the pattern which is used in a cycle pattern. • In the case of attempting to delete the custom pitch or condensation custom which is used in a pattern.	
E407	Wrong password	• In the case the password entered is wrong.	
E408	Shortage of number of password characters	• In the case the number of password characters entered is not enough.	
E411	Polygonal stitching pattern registration disabled error	• In the case of attempting to create eleven or more polygonal stitching patterns.	
E412	Custom pitch unregistered error	• In the case the custom pitch number is faulty.	
E413	Condensation custom unregistered error	• In the case the condensation custom number is faulty.	
E499	Simplified program fault		
E704	Data failure (system-version mismatch)	• In the case the system version does not match the machine head setting.	• Re-write the system version to the applicable one.
E731	Motor hole sensor fault	• In the case the motor signal is not input properly.	• Check whether the motor signal connector has loosened or slipped off. • Check whether the motor signal cord has broken by being caught under the machine head. • Check whether the insertion direction of the motor encoder connector is correct.
E733	Reverse rotation of motor	• When the motor runs at a speed of 500 sti/min. or more, the motor runs in the reverse direction of the indicated direction of rotation.	• Check whether the main shaft motor encoder wire connection is correct. • Check whether the main shaft motor wire connection for power is correct.
E750	Sewing machine stops	• In the case the optional-input safety switch is pressed.	

Error code	Description of error	Cause	Item to be checked
E811	Over-voltage	• In the case a voltage that is equal to or more than the guaranteed voltage is input. • In the case a voltage of 200 V is applied though the voltage is set to 100 V. • In the case a voltage of 220 V is input to the box of "JA: 120 V". • In the case a voltage of 400 V is applied to the box of "CE: 230 V".	• Check whether the supply voltage of "rated supply voltage ±10 % or more" is applied. • Check whether the 100 V/200 V changeover connector is set correctly. In the above-described cases, the power PCB has broken.
E813	Low voltage		
E815	Regenerative resistor is not connected	• In the case the regenerative resistor is not connected.	• Check whether the regenerative resister is connected to the regenerative resistor connector (CN11).
E900	Main shaft motor IPM overcurrent protection	• Maloperation of the main shaft motor.	
E901	Main shaft motor IPM overload		
E903	85-V power supply fault	• In the case the 85-V voltage is not properly output.	• Check whether the stepping motor is faulty. • Check the F2 fuse.
E904	24-V power supply fault	• In the case the 24-V voltage is not properly output.	
E910	The presser motor origin retrieval error	• In the case the presser motor has failed to return to its origin.	• Check whether the presser setting is correct (memory switch No. 23). • Check whether the presser motor origin has been correctly adjusted.
E912	Main shaft motor speed detection error		
E915	Failure of communication with operation panel	• In the case communication with the operation panel cannot be carried out.	
E918	Main shaft temperature error	• In the case the temperature of the CTL PCB is excessively high.	
E922	Main shaft control failure	• In the case the main shaft motor is out of control.	
E924	Motor driver fault	• In the case the motor driver has broken.	
E946	Machine-head EEPROM write error	• In the case the machine head PCB is not correctly connected.	• Check whether CN32 has loosened or come off.
E955	Electric current sensor error	• Main motor shaft failure. • Electric current sensor failure.	• Check whether the main shaft motor has short-circuited.
E961	Pitch motor deviation error	• In the case the pitch motor fails to operate because of an excessive load.	• Check whether the pitch motor runs smoothly.
E962	Presser motor deviation error	• In the case the presser fails to operate because of an excessive load.	• Check whether the presser motor runs smoothly.
E963	IPM temperature error	• In the case the temperature of the CTL PCB is excessively high.	
E965	Pitch motor temperature error	• In the case the pitch motor is applied with an excessive load.	• Check whether the pitch motor runs smoothly.

Error code	Description of error	Cause	Item to be checked
E967	Deviation error of the alternating vertical movement motor	• The alternating vertical movement motor is overloaded.	• Does the alternating vertical movement motor move smoothly without hitch?
E971	Pitch motor IPM over-current protection	• Pitch motor maloperation.	
E972	Pitch motor overload	• In the case the pitch motor is applied with an excessive load.	• Check whether the pitch motor runs smoothly.
E975	Presser motor IPM over-current protection	• Presser motor maloperation.	
E976	Presser motor overload	• In the case the presser motor is applied with an excessive load.	• Check whether the presser motor runs smoothly.
E977	CPU fault	• In the case of a program fault.	
E978	Network communication fault	• In the case the data received from the network is damaged.	
E979	IPM overcurrent protection	• Alternating vertical movement amount motor operation failure	
E980	Alternating vertical movement amount motor overload	• The alternating vertical movement amount motor is overloaded.	• Does the alternating vertical movement amount motor move smoothly without hitch?
E985	Pitch motor return-to-origin error	• In the case the pitch motor has failed to return to its origin.	• Check whether the origin of the pitch motor has been adjusted properly.
E986	Alternating vertical movement amount motor origin return-to-origin error	• In the case the alternating vertical movement amount motor has failed to travel to its origin.	• Is the origin of the alternating vertical movement amount motor adjusted incorrectly?
E987	Suspended ruler return-to-origin error	• In the case the suspended ruler motor has failed to travel to its origin.	• Is the origin sensor (CN97) of the suspended ruler is properly connected?
E999	Main software rewriting	• In the case of rewriting the main software.	• It is not an error.

6-7. Memory switch data

The memory switch data is the sewing machine operation data which commonly affects all sewing patterns and cycle patterns.

① Selecting the category of the memory switch data

<Sewing screen>

1) Press **M** ❶ on the sewing screen to display the "mode screen".

<Mode screen>

2) Select the "1. Memory switch".
The "memory switch type selection screen" is displayed.

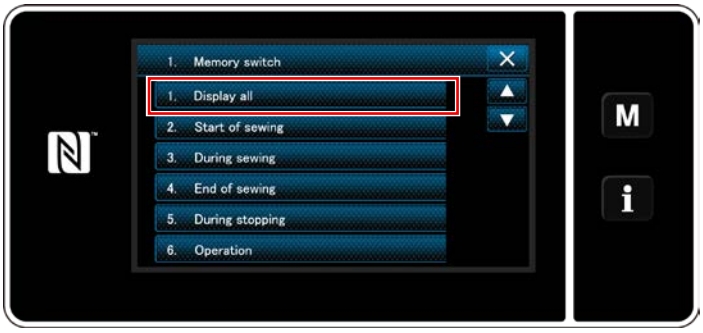

<Memory switch type selection screen>

3) Select the "1. Display all".
The "memory switch edit screen" is displayed.
* In the case any item other than "1. Display all" is selected, only the memory switch which corresponds to the selected item is displayed on the memory switch edit screen.

② Setting the memory switch

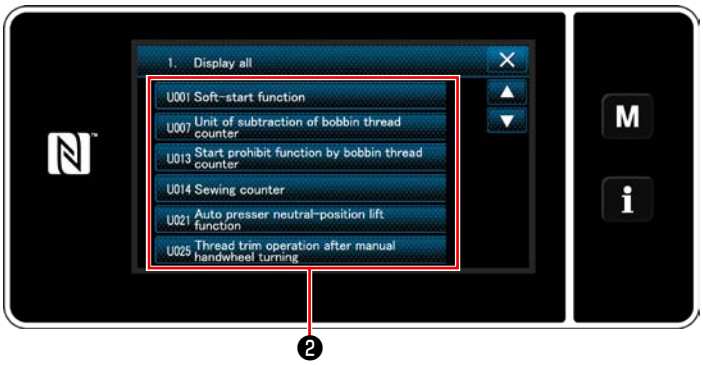

<Memory switch edit screen>

Select an item to edit from the memory switch list.
Press button ❷.

③ Confirming the data entered

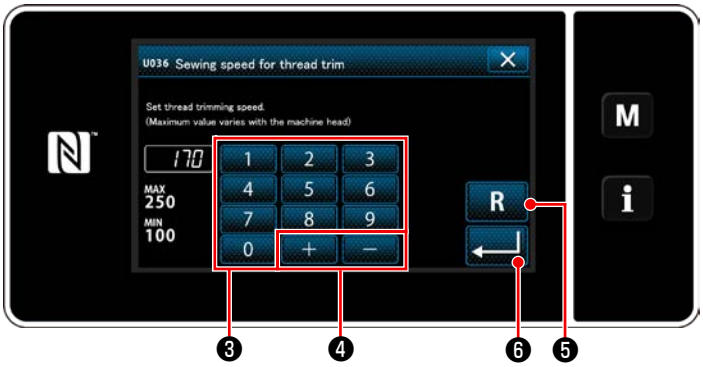

<Input screen>

1) Enter a set value with numeric keypad ❸ and [+] [−] ❹ .
2) Keep [R] ❺ held pressed for one second to return the set value to the initial value.
3) Press [↵] ❻ to confirm the setting.
   The "memory switch edit screen" is displayed.

7. CARE

Perform the maintenance below every day for longer use of your machine.

7-1. Standby mode

The maintenance mode should be used for maintenance of the sewing machine.

Under the standby mode, the sewing machine does not start running even if the pedal is depressed. Under this mode, the jog dial is also disabled. It is therefore necessary to turn the handwheel by hand if the needle bar position has to be adjusted.

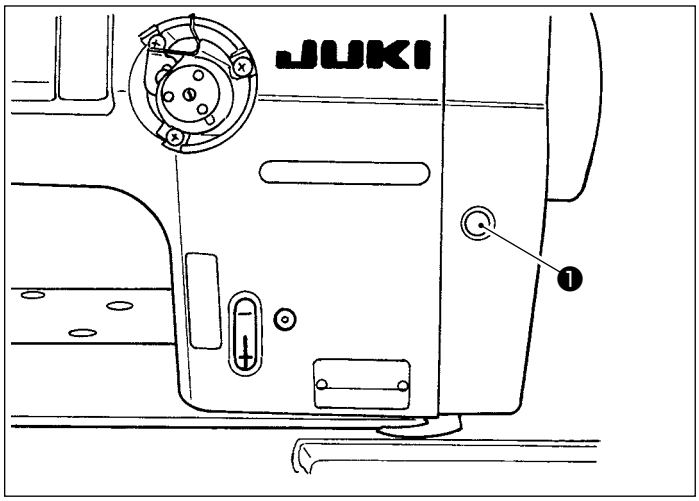

1) When standby switch ❶ is pressed on the sewing machine start screen, the sewing machine enters the standby mode.

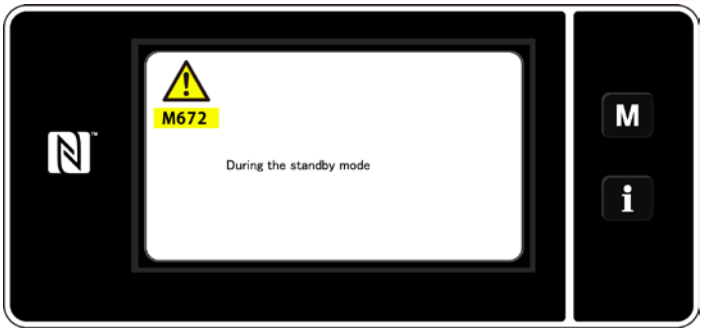

2) Under the standby mode, the message is displayed and the standby switch lights up.

Be sure to check that the screen has changed to the maintenance mode screen so as to prevent accidents caused by abrupt start of the sewing machine.

3) When standby switch ❶ is pressed under the standby mode, the screen returns to the previous screen.

7-2. Cleaning

WARNING :
To protect against possible personal injury due to abrupt start of the machine, be sure to start the following work after turning the power off and ascertaining that the motor is at rest.

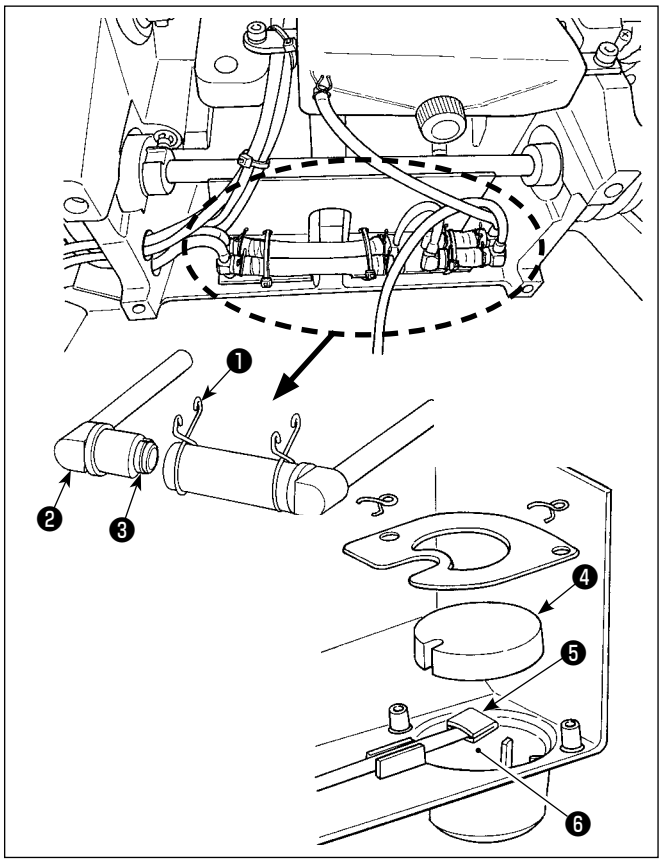

■ Cleaning the oil filter

1) Loosen fastening plate ❶ on the back-flow side. Remove oil filter joint (asm.) ❷ on the back-flow side.
2) Clean up filters ❸ , ❹ and ❺ and oil reservoir ❻ of the oil pan.

Caution
Be sure to clean up the oil reservoir of the oil pan and the filter case approximately once a month.
If the filter is clogged with soil, lubrication fails resulting in trouble.

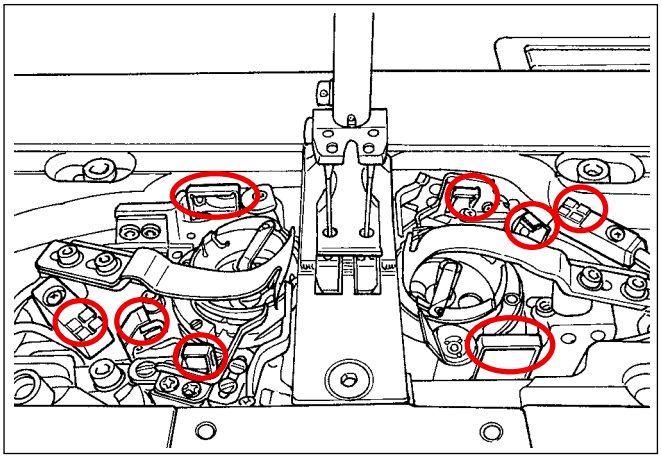

■ Cleaning the stitch skipping detection sensor, bobbin thread remaining amount detection sensor and cover sensor

If the sensor errors occur frequently, clean up the encircled portions in the figure with an air blower.
If the sensor error still occurs after the cleaning with an air blower, carefully wipe the dirt off the sensors with a cotton swab, or the like.

7-3. Applying grease

WARNING :
To protect against possible personal injury due to abrupt start of the machine, be sure to start the following work after turning the power off and ascertaining that the motor is at rest.

Caution

1. **When the machine needs replenishment of grease, an alarm sounds. Once the alarm sounds, replenish grease. In the case the machine is used under harsh environment, it is recommended to replenish grease once a year for ensuring effective greasing.**
2. **Do not apply oil to the sections which are lubricated with grease.**
3. **Be aware that grease can leak from the thread take-up cover and needle bar if the amount of grease is excessive.**
4. **Be sure to use JUKI GREASE A TUBE ❶ (part number : 40006323).**

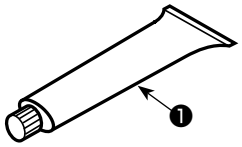

7-4. Replacing the fuse

DANGER :
1. **To avoid electrical shock hazards, turn OFF the power and open the control box cover after about five minutes have passed.**
2. **Open the control box cover after turning OFF the power without fail. Then, replace with a new fuse with the specified capacity.**

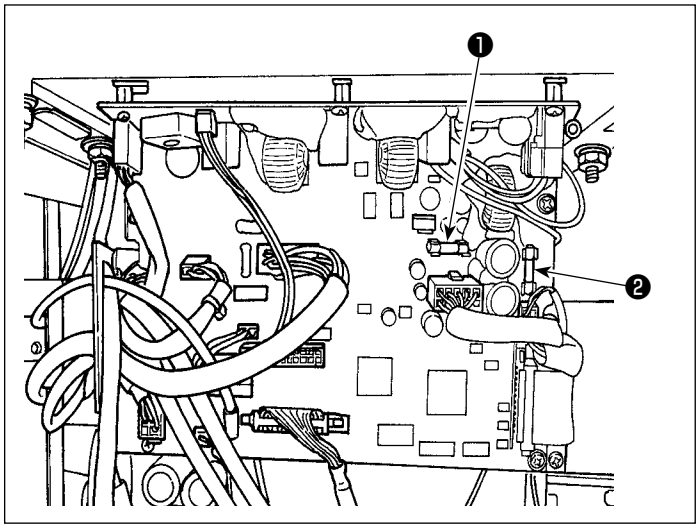

The machine uses the following two fuse.
Both are the same fuses.

CTL PCB
❶ For 85V power supply protection
5A (time-lag fuse)
❷ For 24V power supply protection
5A (time-lag fuse)

7-5. Disposal of batteries

The operation panel has a built-in battery in order to operate the clock even when the power is turned OFF. Be sure to dispose of the battery following the local laws and regulations.

[How to remove the battery]

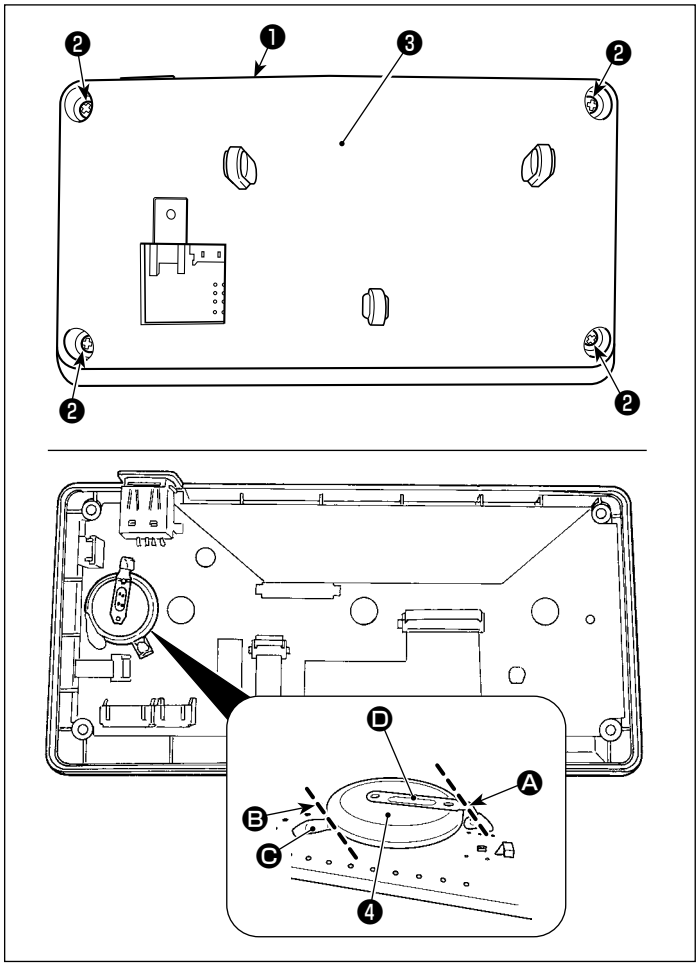

1) Remove panel ❶ from the main body of sewing machine.
2) Loosen screw ❷ from the rear surface of the operation panel. Detach case ❸ .
3) ❹ is the battery for clock.
Type number: ML2020/F1AK
4) Cut metal plate Ⓓ that secures battery ❹ with nippers or the like at position Ⓐ.
5) Cut metal plate Ⓒ that secures battery ❹ with nippers or the like at position Ⓑ. Then, remove battery ❹ .

Carefully protect your fingers from being cut with the cut edge of the metal plate.

8. ADJUSTMENT OF THE MACHINE HEAD (APPLICATION)

8-1. Needle-to-hook relation

WARNING :
To protect against possible personal injury due to abrupt start of the sewing machine, be sure to change over the operation mode to the "hook timing adjustment mode".
The presser foot automatically goes up when changing over the operation mode to the "hook timing adjustment mode". In addition, the presser foot also comes down when the "hook timing adjustment mode" is finished and the power is turned OFF. Be sure carry out the operation while keeping your hands, etc. away from the presser foot.
For the sewing machine which is provided with the stitch skipping detecting device, the light emitted by the sensor LED may light into the eye to cause dazzling when adjusting the hook timing.
To avoid this, cover the LED before adjusting the hook timing.

For the sewing machine provided with the stich skipping detection device, the adjustable range of needle gauge is 4 to 25 mm.

[Hook timing adjustment mode]

The hook timing adjustment is used when adjusting the needle-to-hook timing, etc.

<Sewing screen>

1) Keep **M** ❶ held pressed for three seconds.
The "mode screen" is displayed.

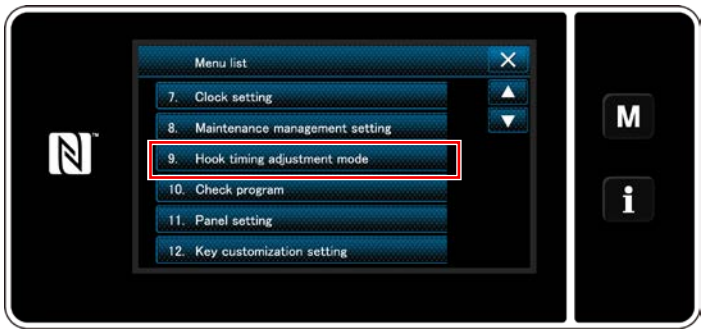

<Mode screen>

2) Select "9. Hook timing adjustment mode".

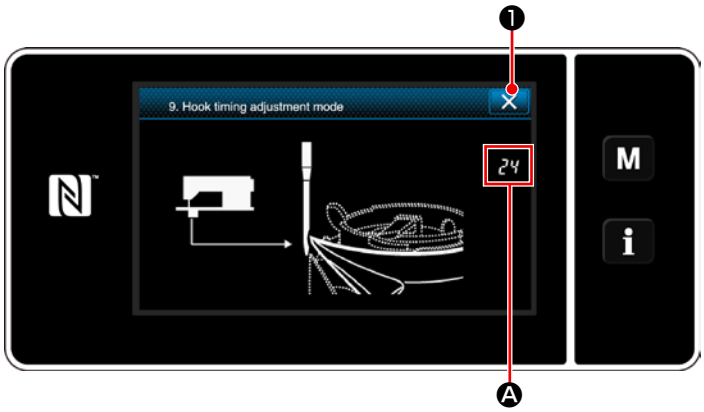

<Hook timing adjustment mode screen>

3) The sewing machine is changed over to the "hook timing adjustment mode".
The presser foot goes up. In this state, the needle bar position can be adjusted by turning the main shaft by hand.
The current position of needle bar is displayed at section Ⓐ.
When ✕ ❷ is pressed, the "hook timing adjustment mode" is finished. Turn the power OFF.

Under the "hook timing adjustment mode", the jog dial is disabled. Adjust the position of needle bar by turning the main shaft by hand.

8-2. Adjusting the timing between the needle and the blade point of hook

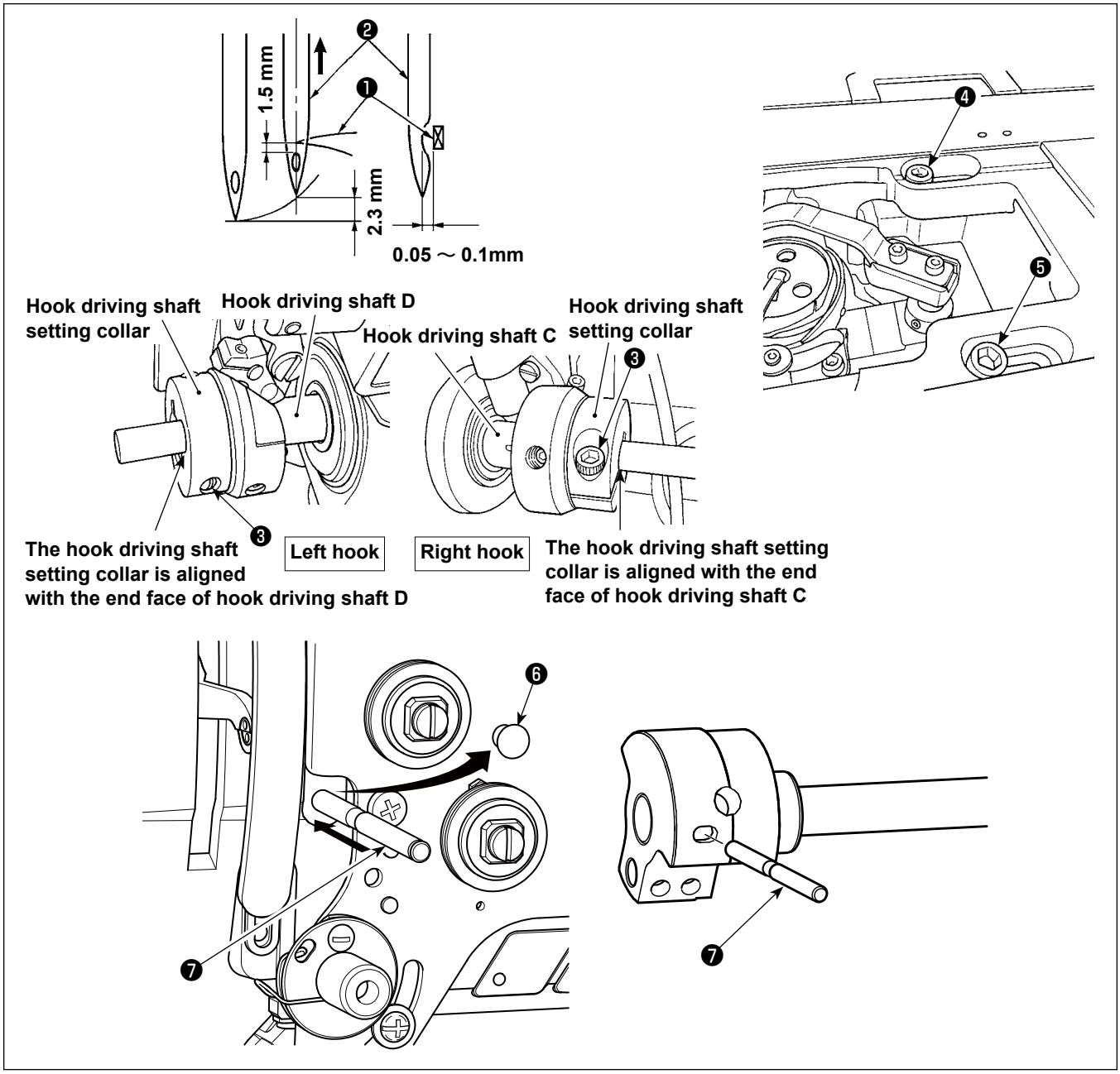

1) Place the sewing machine into the hook adjustment mode.
2) Loosen hook driving shaft set collar clamping screw ❸ .
3) Remove rubber cap ❻ .
4) Insert positioning pin ❼ into the groove in the balance weight.
5) With the machine in the state described in 4), align blade point ❶ of the hook with the center of needle ❷ and tighten hook driving shaft set collar clamping screw ❸ . At this time, the distance between the blade point of the hook and the upper end of the needle eye should be 1.5 mm. (When the value shown on the main shaft rotation angle display is advanced by 25° from the value displayed with the needle bar at the lowest point of its stroke, the needle bar rises by 2.3 mm and the distance between the blade point of the hook and the upper end of the needle eye becomes 1.5 mm.)
6) Loosen hook driving shaft saddle setscrews ❹ and ❺ on the top surface of the bed. Move the hook driving shaft saddle to the right or left to adjust the clearance between the blade point of the hook and the needle to 0.05 to 0.1 mm. Then tighten setscrews ❹ and ❺ .
7) Remove positioning pin ❼ .
8) Attach rubber cap ❻ .

8-3. Adjusting the hook needle guard

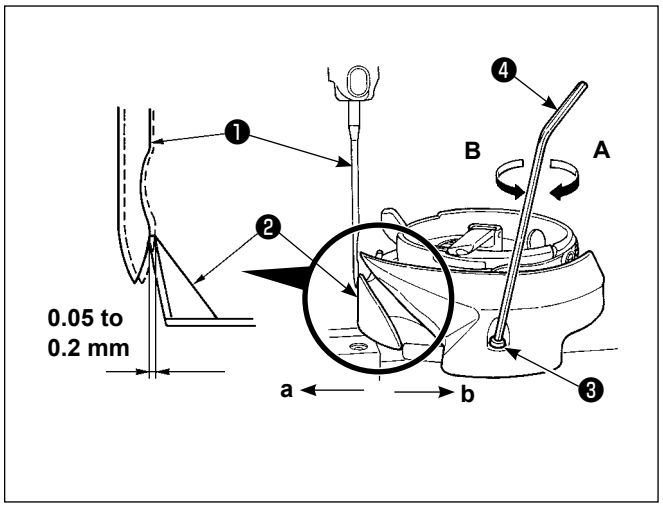

When a hook has been replaced, be sure to check the position of the hook needle guard.
As the standard position of the hook needle guard, hook needle guard ❷ must push the side face of needle ❶ to lean the needle by 0.05 to 0.2 mm away from its straight position.
If the state of the hook is not as shown above, fit hexagon wrench ❹ into ❸ of needle guard adjusting screw and adjust as follows:

1) Place the sewing machine into the hook adjustment mode.
2) To bend the hook needle guard in direction **a**, turn the needle guard adjusting screw in direction **A**.
3) To bend the hook needle guard in direction **b**, turn the needle guard adjusting screw in direction **B**.
4) At the final step of procedure, appropriately adjust the clearance provided between the needle and the hook.

8-4. Adjusting the bobbin case opening lever

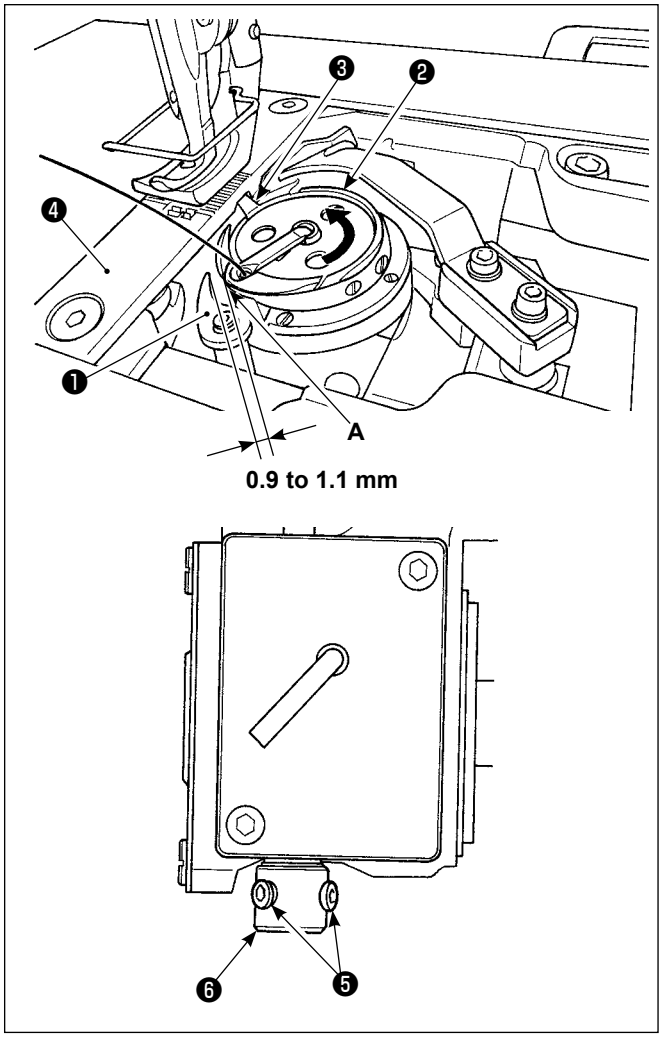

1) Place the sewing machine into the hook adjustment mode.
2) Turn the handwheel in its normal rotational direction to bring bobbin case opening lever ❶ to its back end position.
3) Turn inner hook ❷ in the direction of the arrow until stopper ❸ is pressed against the slits in throat plate ❹ .
4) Loosen setscrews ❺ of the bobbin case opening lever sleeve. Adjust the clearance provided between the bobbin case opening lever and the projection **A** of the bobbin case to 0.9 to 1.1 mm. Tighten setscrews ❺ while pressing bobbin case opening lever ❶ downward and pressing the bobbin case holding lever sleeve ❻ upward.

8-5. Adjusting the position of counter knife, knife pressure and clamp pressure

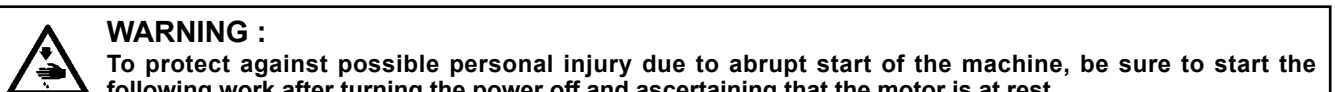

WARNING :
To protect against possible personal injury due to abrupt start of the machine, be sure to start the following work after turning the power off and ascertaining that the motor is at rest.

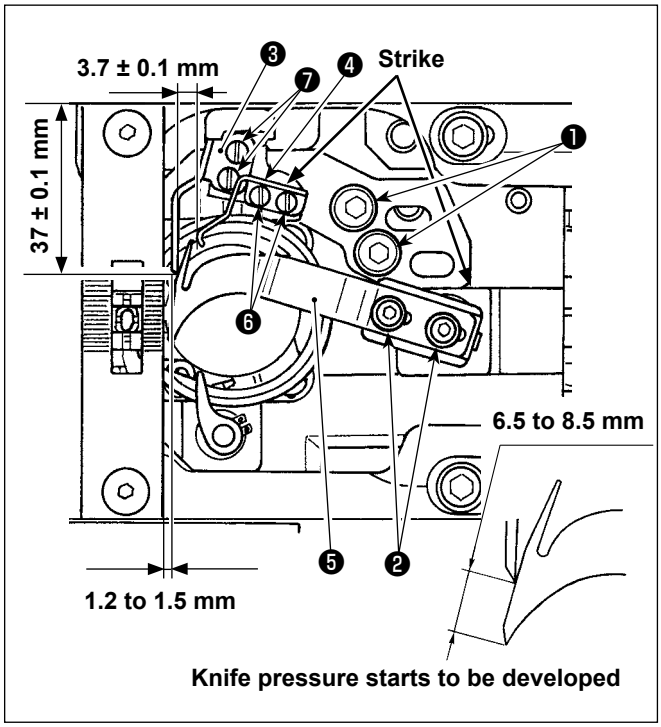

1) Move the moving knife ❺ by hand to its forward travel end.

- **Adjusting the counter knife**

2) Loosen counter knife base setscrews ❶ . Adjust the position of the counter knife so that top end of the counter knife ❸ so that it is spaced 1.2 to 1.5 mm from the end face of the throat plate in terms of the lateral direction, and so that it is pressed against the stepped section of hook driving shaft saddle in terms of the longitudinal direction. Then, tighten setscrews ❶ .
Loosen counter knife setscrews ❼ . Adjust the distance between the bed slide mounting plane and the counter knife tip to 37 ± 0.1mm. Then, tighten setscrews ❼ .

- **Adjusting the knife pressure**

3) Loosen setscrews ❷ in the moving knife.
Turn the handwheel to move the moving knife and adjust the knife pressure.
As the standard adjustment, the knife pressure should be applied from the time when the distance from the top end of the moving knife to the top end of the counter knife is 6.5 to 8.5 mm.

1. Adjust the knife pressure in the state that the clamp spring ❹ does not come in contact with the moving knife ❺ (the clamp pressure is not developed).
2. Be sure to carefully prevent from getting injured by the moving knife ❺ , counter knife ❸ , blade point of the hook, etc.

- **Adjusting the clamp pressure**

4) To adjust the clamp pressure, firstly loosen clamp spring setscrew ❻ . Adjust the lateral position of clamp spring so that a clearance of 3.7 ± 0.1 mm is provided between clamp spring ❹ and counter knife ❸ . Then, adjust the longitudinal position of the clamp spring by tightening setscrew ❻ with the clamp spring pressed against the stepped portion of the counter knife base.

Check to make sure that the clamp pressure is applied when moving knife ❺ moves to its back end.

8-6. Adjusting the thread trimming cam timing

WARNING :
To protect against possible personal injury due to abrupt start of the machine, be sure to start the following work after turning the power off and ascertaining that the motor is at rest.

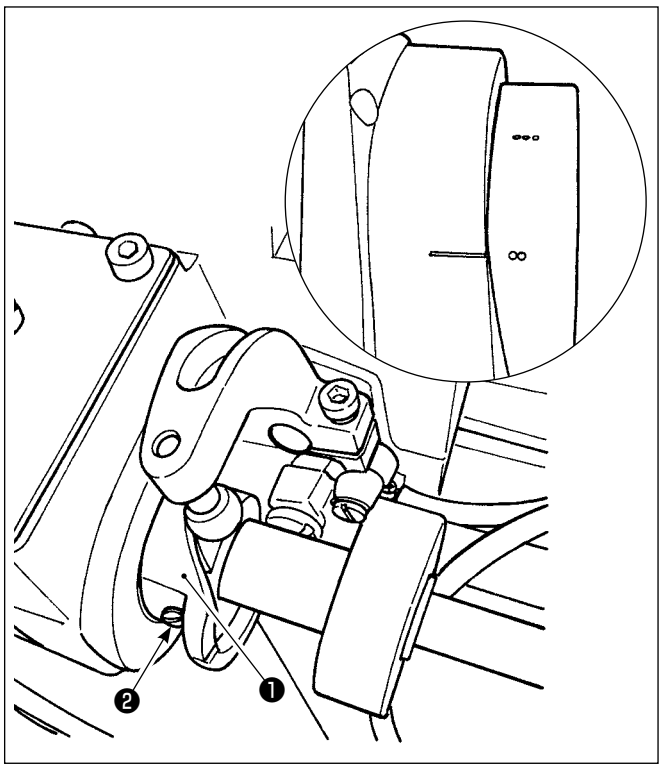

Bring the moving knife to its front end. At this time, position the thread trimming cam so that the two marker dots on the handwheel align with the marker line of the motor cover. Then, tighten thread trimming cam setscrew ❷ to fix thread trimming cam ❶ .

8-7. Active-presser multi-layered section detection function

8-7-1. Multi-layered section detection function

When this function is used, the sewing machine detects a multi-layered section of the material, automatically changes over the sewing parameter to one-touch changeover 4 parameter (**"6-2-8. One-touch utility changeover function" p.79**) and carries out sewing. The multi-layered section detection setting can be stored in memory on a pattern-by-pattern basis.

Detectable material thickness : Max. 10 mm

Detection resolution : 0.1 mm

* Multi-layered section of material that is less than 2 mm in thickness is likely to be affected by the feed dog height. Stable detection, therefore, cannot be carried out. It is not possible to detect two or more multi-layered sections thickness of which are different. In such cases, one-touch changeover function or the polygonal-shape stitching function by means of the hand switch should be used.

Caution **If the presser foot rests on a multi-layered part of material when turning the power ON, the multi-layered part detection may fail to be turned ON.**

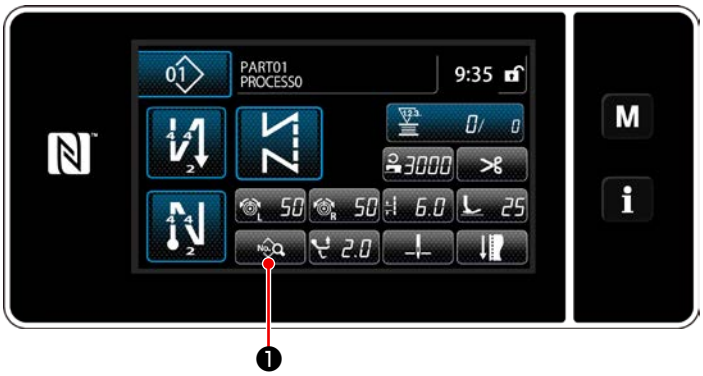

<Sewing screen>

[In order to detect a multi-layered section]

1. Select enable/disable of the multi-layered section detection function.

1) Press ❶.

The "sewing data edit screen" is displayed.

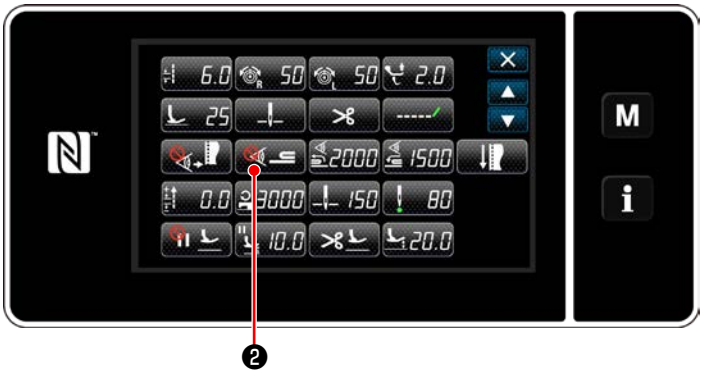

<Sewing data edit screen>

2) Press ❷.

"S058 Multi-layered part sensor screen" is displayed.

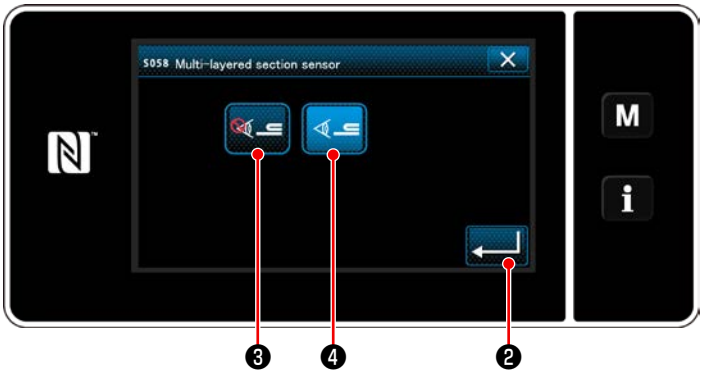

<Multi-layered section detection sensor value screen>

3) Select enable/disable of the multi-layered part detection by pressing ❸ (OFF) or ❹ (ON).

4) Press ❺ to confirm the setting. Then, the sewing data edit screen is displayed.
Set the "threshold" for ON/OFF of the multi-layered section detection.

* For the purpose of the multi-layered section detection function, the word "threshold" means the value at which the multi-layered section sensor reacts.

MAX : 3000
MIN : 1000

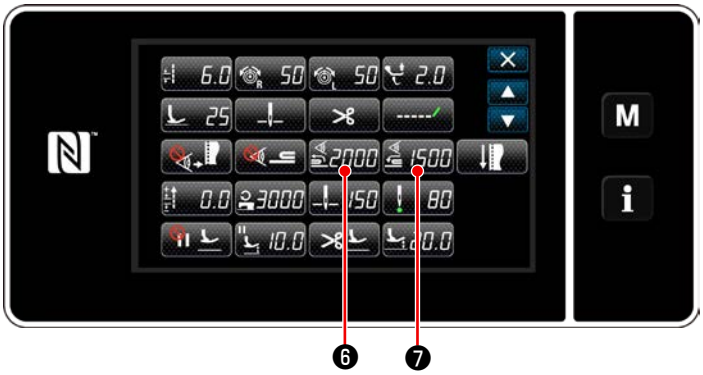

<Sewing data edit screen>

2. Set a "threshold" for the multi-layered section detection.

1) Press 2000 ❻ .

"Multi-layered section changeover function ON sensor value screen" is displayed.
(For the "threshold" for turning OFF the multi-layered section changeover function, press 1500 ❼ and set the threshold in the same manner as described below.)

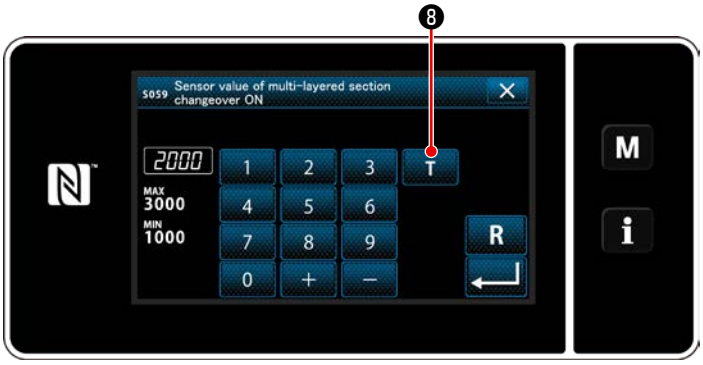

<Multi-layered section changeover function ON sensor value screen>

2) Press T ❽ .

"Multi-layered section changeover function ON sensor value teaching screen" is displayed.

3) Place the normal section of material under the presser foot, and press ❾ .
Lift the presser foot by depressing the back part of pedal.

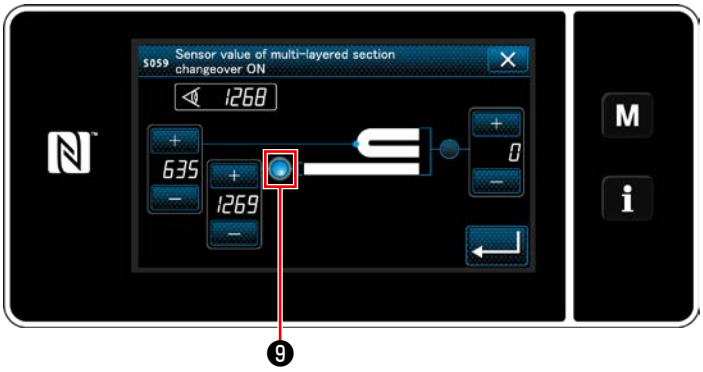

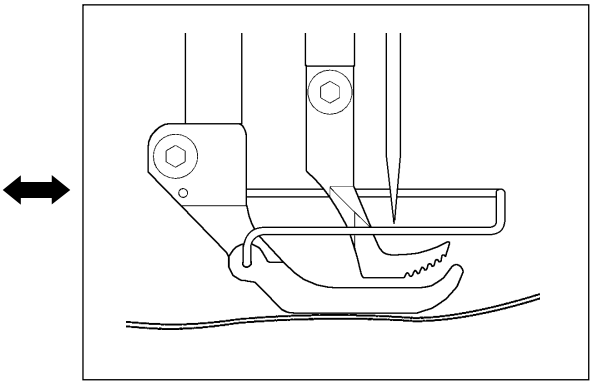

<Multi-layered section changeover function ON sensor value teaching screen>

4) Place the multi-layered section of material under the presser foot, and press ❿ .

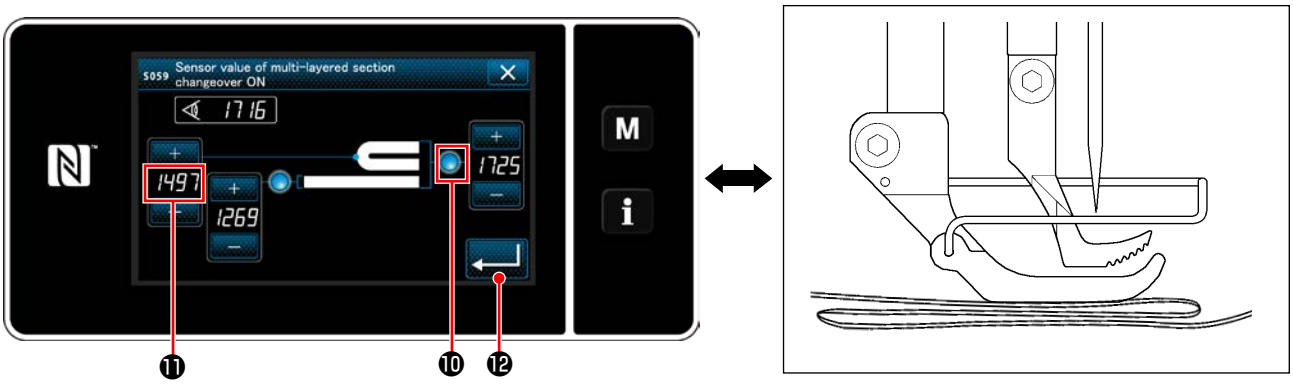

<Multi-layered section changeover function ON sensor value teaching screen>

The value of ⓫ is automatically calculated, and that value becomes the "threshold" for the multi-layered section detection. The value is adjustable with [+] [−] according to the sewing item.

> **Caution** **If the "threshold" is decreased, the multi-layered section can be detected earlier. Be aware that, excessively decreased threshold can cause a faulty detection.**

When [↵] ⓬ is pressed, the "multi-layered section changeover function ON sensor value screen" is displayed.

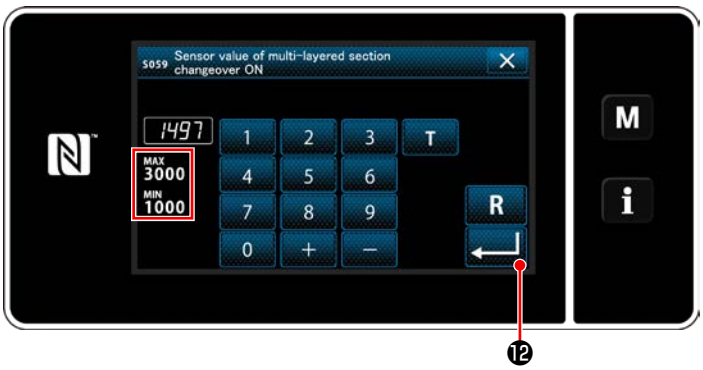

<Multi-layered section changeover function ON sensor value screen>

Check that the "threshold" you have set is entered. Then, press [↵] ⓬ again to confirm the setting. Note that the "threshold" can be directly entered or corrected on this screen.

MAX : 3000
MIN : 1000

> **Caution** **The initial value of "threshold" for the multi-layered section detection is a rough indication. The threshold should be finely adjusted according to the actual sewing conditions such as the item to be sewn.**

8-7-2. Turning OFF the multi-layered section changeover function by the number of stitching

If the sensor value drops below the "multi-layered section changeover function OFF threshold" setting, while the multi-layered section detection is enabled, the sewing parameter automatically returns to the previous one which is used before turning ON the multi-layered section changeover function.
The aforementioned changeover timing can be changed by setting the number of stitches.
Once the number of stitches for turning OFF the multi-layered section changeover function is set, the sensor value returns to the previous one which is used before turning ON the multi-layered section changeover function, after the sewing machine sews the number of stitches from the position at which a multi-layered section is detected even when the detection position is within the multi-layered section of material.
Note that if the sensor value drops below the "multi-layered section changeover function OFF threshold" setting for the multi-layered section detection even within the range of the number of stitches setting, the sewing parameter returns to the previous one which is used before turning ON the multi-layered section changeover function.

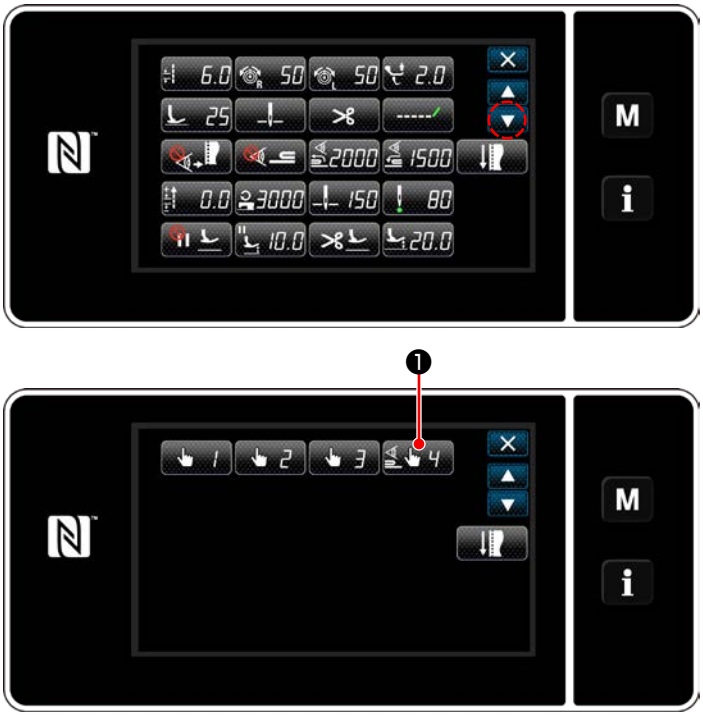

<Sewing data edit screen>

[How to set]

1) Press 4 ❶ on the "Sewing data edit screen".
The "one-touch changeover function 4 edit screen" is displayed.

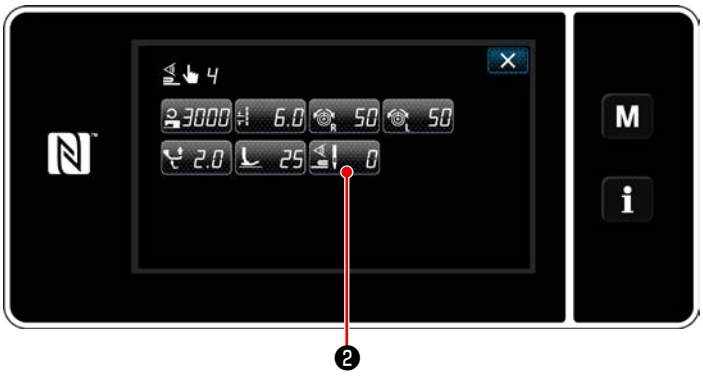

<One-touch changeover function 4 edit screen>

2) Press 0 ❷ .
The "number of stitches to turn OFF the changeover function when the one-touch changeover function is enabled" is displayed.

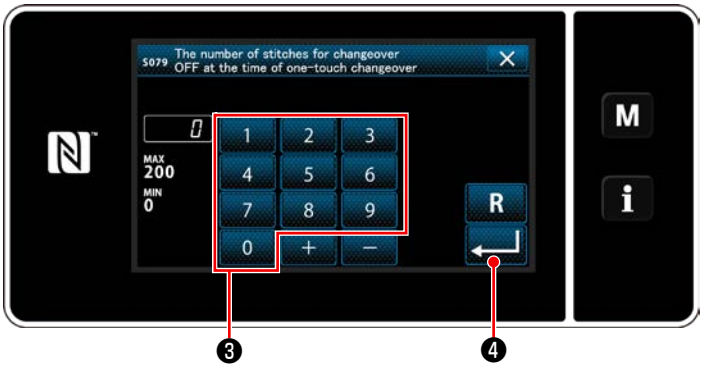

<Number of stitches to turn OFF the changeover function when the one-touch changeover function is enabled>

3) Enter the number of stitches with numeric keypad ❸ .

Press ❹ to confirm the setting.

Factory-set value at the time of delivery

: 0 (Number of stitches is not set)

Setting range : 0 to 200

* If this value is set to 0 (zero), the multi-layered section changeover OFF function by the number of stitches will be disabled.

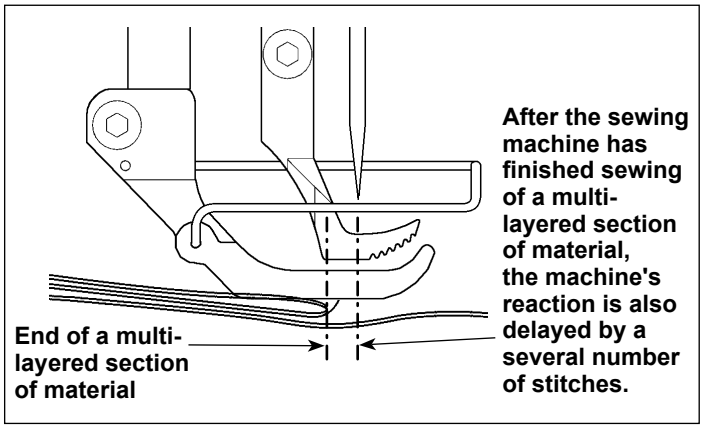

Caution

After the end of multi-layered section of material is fed, the multi-layered section detection function detects the flat section of material to return the sewing conditions to those for the flat section. However, this reaction sometimes delays according to the sewing conditions.
If such a delay occurs, it can be corrected by setting the number of stitches of the multi-layered section detection.

8-8. Grease shortage alarm

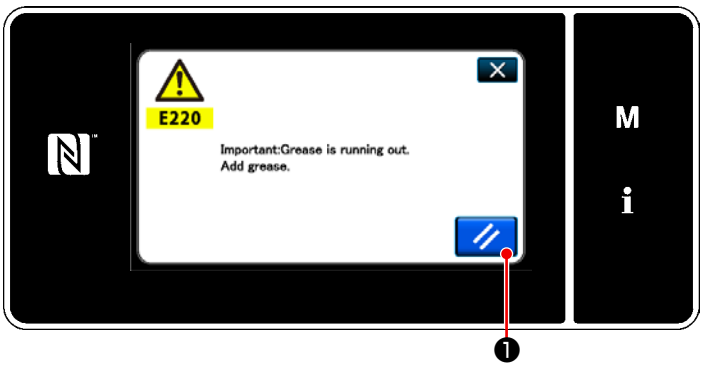

8-8-1. Regarding the grease shortage alarm

When the time of maintenance of grease approaches, the error message "E220 Warning against shortage of grease" is displayed.

This error is reset by pressing ❶. In this state, the sewing machine can be continuously used for a certain period of time.

Once the error message E220 is displayed, be sure to add grease for maintenance.

* Refer to **"8-8-3. Regarding K118 error resetting procedure" p. 116** in the case of carrying out error resetting (K118).

8-8-2. E221 Grease-shortage error

If the error message "E220" is not reset, the error message "E221 Grease-shortage error" will be displayed.

In this case, the sewing machine operation is disabled. Be sure to add grease and carry out error resetting (K118).

* Refer to **"8-8-3. Regarding K118 error resetting procedure" p. 116** in the case of carrying out error resetting (K118).

8-8-3. Regarding K118 error resetting procedure

1) Keep M ❶ held pressed for three seconds.
The "mode screen" is displayed.

<Sewing screen>

2) Select the "1. Memory switch".
The "memory switch type selection screen" is displayed.

<Mode screen>

3) Select the "1. Display all".
The "memory switch edit screen" is displayed.

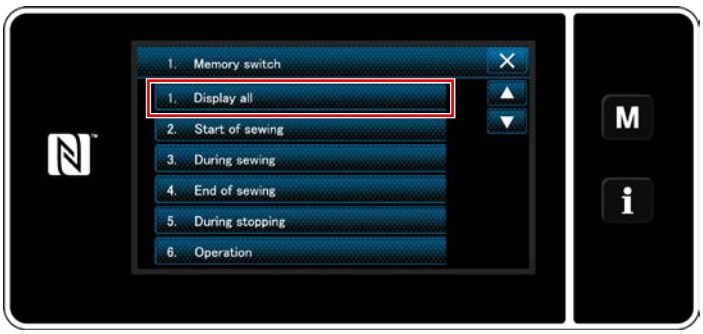

<Memory switch type selection screen>

4) Select the "K118 Grease-shortage error reset".
The "Grease-shortage error reset screen" is displayed.

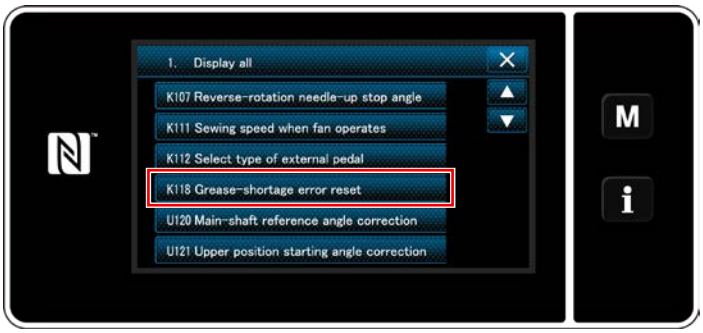

<Memory switch edit screen>

5) Set the set value to "1" using numeric keypad ❷ and + − ❸ . Press ↵ ❹ to confirm the setting.
This resets the error to bring the sewing machine back to the normal operation. The sewing machine can run normally until the next maintenance period is reached.

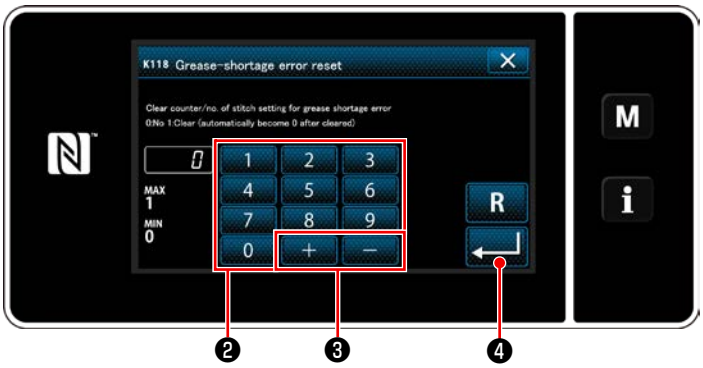

<Grease-shortage error reset screen>

9. HOW TO USE THE OPERATION PANEL (APPLICATION)

9-1. Management of sewing patterns

9-1-1. Creation of a new pattern

A newly-created sewing pattern is registered by following the steps of procedure described below.

*** This operation is to be carried out under the maintenance personnel mode.**

① Selecting the new-pattern creating function

<Sewing screen (Maintenance personnel mode)>

1) Press 01 ❶ on the sewing screen under the maintenance personnel mode.
The "sewing pattern number list screen" is displayed.

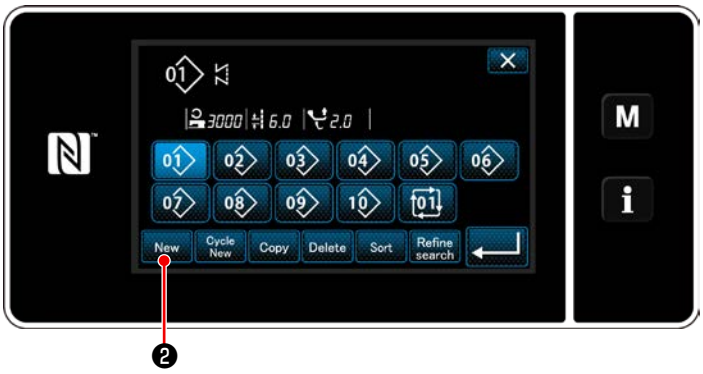

<Sewing pattern number list screen>

2) Press New ❷ .
The "new pattern creation screen" is displayed.

② Setting the sewing shape of a sewing pattern

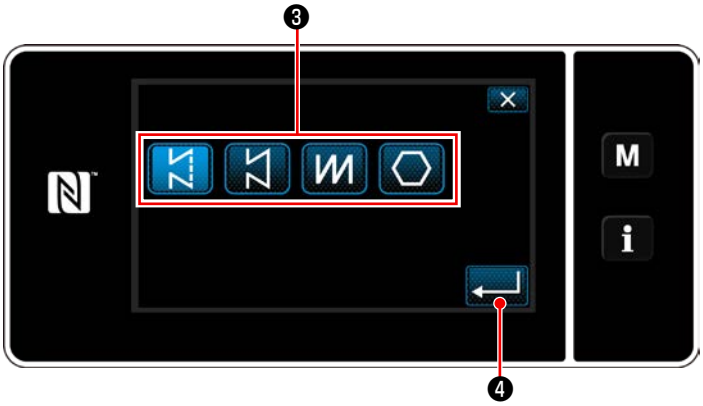

<New pattern creation screen>

1) Select the stitch shape by pressing stitch shape button ❸ .
2) Press ❹ to confirm the setting.
The "new sewing pattern edit screen" is displayed.

③ Setting the pattern function

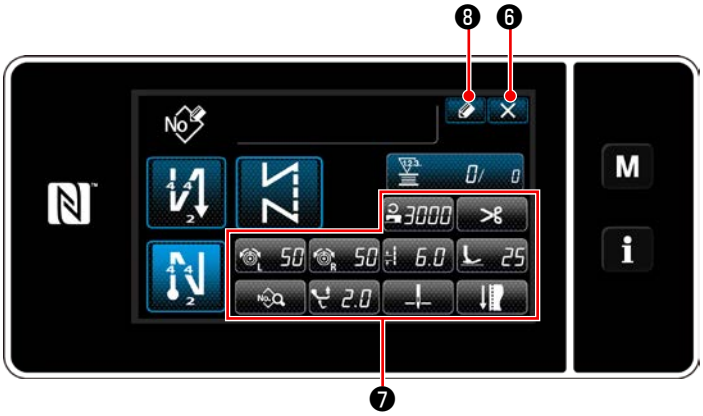

<New sewing pattern edit screen>

1) Set the pattern function using buttons ❼ .
   Refer to **"6-2. Sewing patterns" p. 52**.
2) Press ❽ .
   The "sewing pattern number registration screen" is displayed.
   Press ❻ to display the data discard confirmation screen.

④ Entering a pattern number and registering the pattern

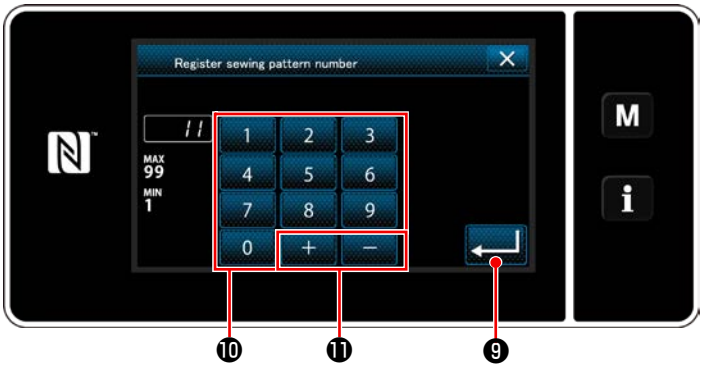

<Sewing pattern number registration screen>

1) Enter the sewing pattern number to be registered using numeric keypad ❿ .
   An unassigned registration number that is closest to the entered value in the plus/minus direction is displayed by pressing + − ⓫ .
2) The created pattern is registered by pressing ❾ . Then, the current screen returns to the "sewing pattern number list screen". In the case the entered number has already been registered, the prompt message for overwrite confirmation is displayed.

9-1-2. Copying a pattern

The selected pattern (sewing pattern and cycle pattern) can be copied to any other pattern of the specified number.

*** This operation is to be carried out under the maintenance personnel mode.**

Explanation is given below using copying of a sewing pattern as an example.

① Selecting the sewing pattern copy function

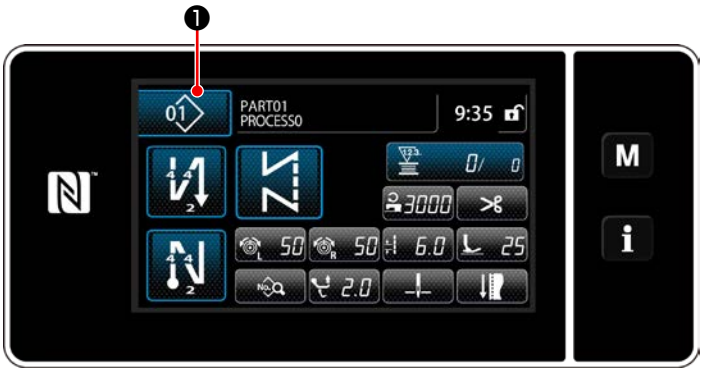

<Sewing screen (Maintenance personnel mode)>

1) Press 01 ❶ on the sewing screen under the maintenance personnel mode.
The "sewing pattern number list screen" is displayed.

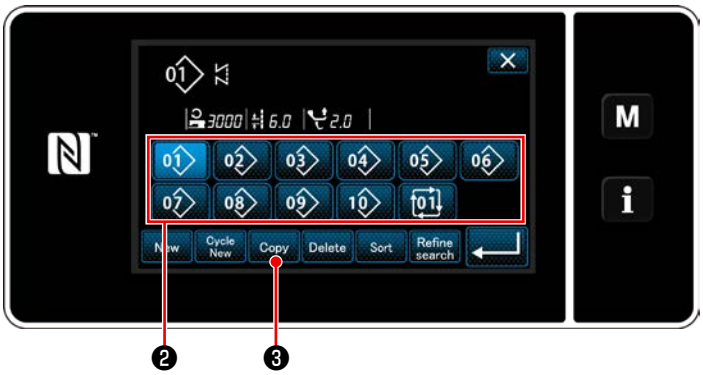

<Sewing pattern number list screen>

2) Select the copy source pattern number from list ❷ .
3) Press Copy ❸ .
The "sewing pattern number copy screen" is displayed.

② Select the copy destination pattern number

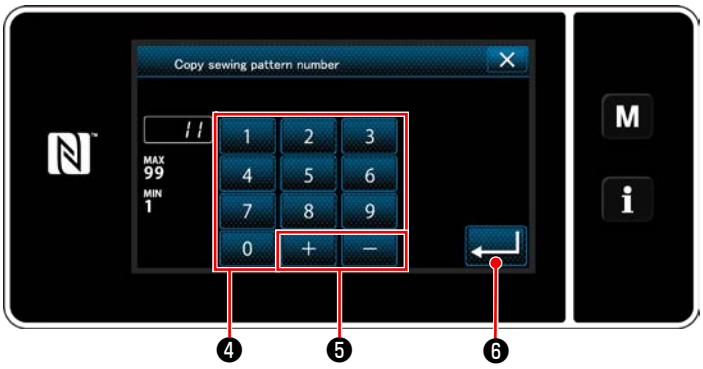

<Sewing pattern number copy screen>

1) Enter the sewing pattern number to be registered using numeric keypad ❹ .
An unassigned registration number that is closest to the entered value in the plus/minus direction is displayed by pressing + − ❺ .
2) The created pattern is registered by pressing ↵ ❻ . Then, the current screen returns to the "sewing pattern number list screen". In the case the entered number has already been registered, the prompt message for overwrite confirmation is displayed.

9-1-3. Deleting a pattern

This section describes how to delete the selected pattern (sewing pattern, cycle sewing pattern).

*** This operation is to be carried out under the maintenance personnel mode.**

① Selecting the sewing pattern deletion function

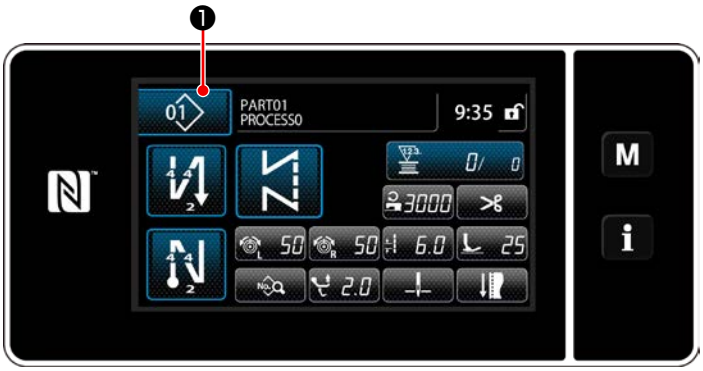

<Sewing screen (Maintenance personnel mode)>

Press 01 ❶ on the sewing screen under the maintenance personnel mode.
The "sewing pattern number list screen" is displayed.

② Selecting the sewing pattern and deleting it

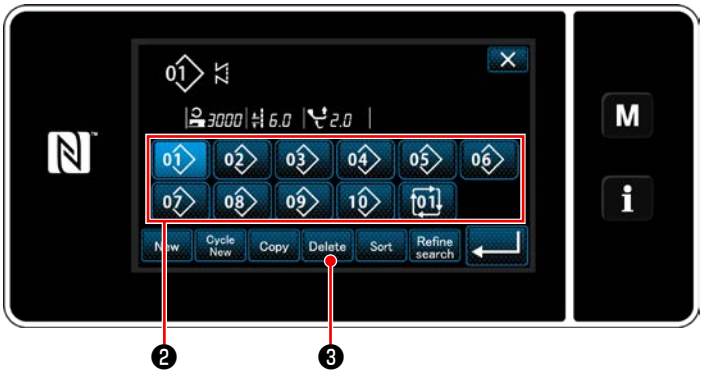

<Sewing pattern number list screen>

1) Select pattern number to delete from list ❷ .
2) Press Delete ❸ .
   The "deletion confirmation screen" is displayed.

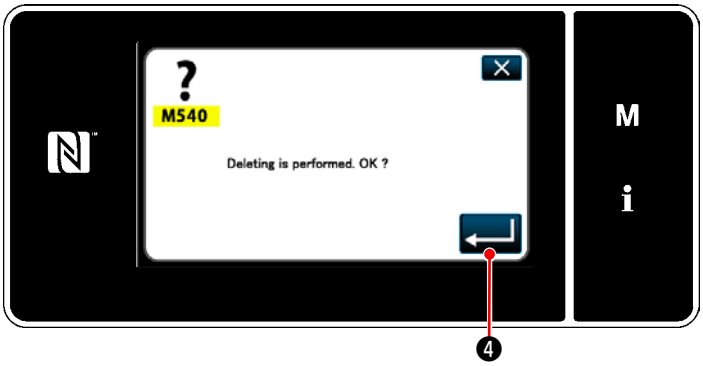

<Deletion confirmation screen>

3) The pattern is deleted by pressing ❹ .

9-2. Setting up the polygonal-shape stitching

A polygonal-shape stitching pattern consists of 30 steps (at the maximum) of constant-dimension sewing patterns. Specific sewing conditions can be set on a step-by-step basis.

*** This operation is to be carried out under the maintenance personnel mode.**

<Example of pattern>

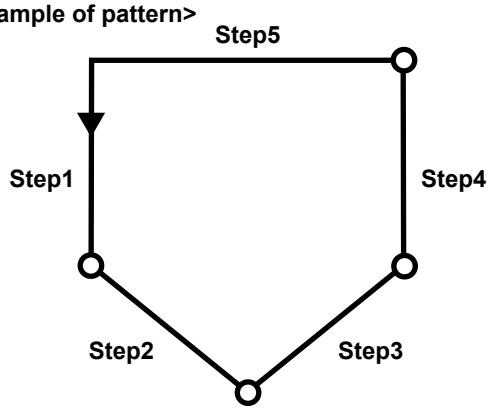

9-2-1. Editing a polygonal-shape stitching pattern

This section describes how to change the number of steps and step-by-step conditions of a polygonal-shape stitching pattern.

① **Displaying the sewing screen (maintenance personnel mode) for the polygonal-shape stitching pattern**

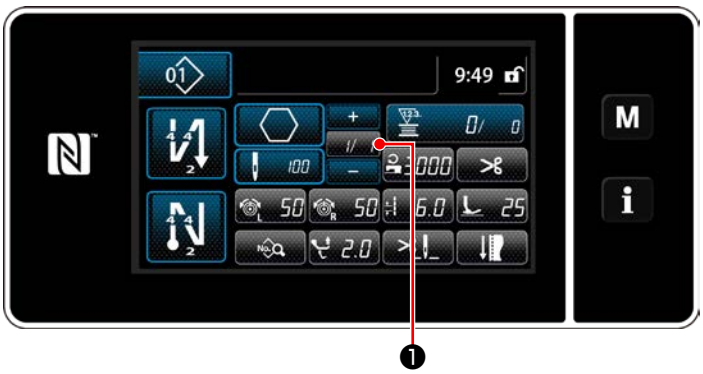

<Sewing screen (Maintenance personnel mode)>

Press ❶ on the sewing screen under the maintenance personnel mode.

The "polygonal-shape stitching step edit screen" is displayed.

② **Editing the number of stitches of polygonal shape stitching and the step changeover condition to be satisfied by a new step**

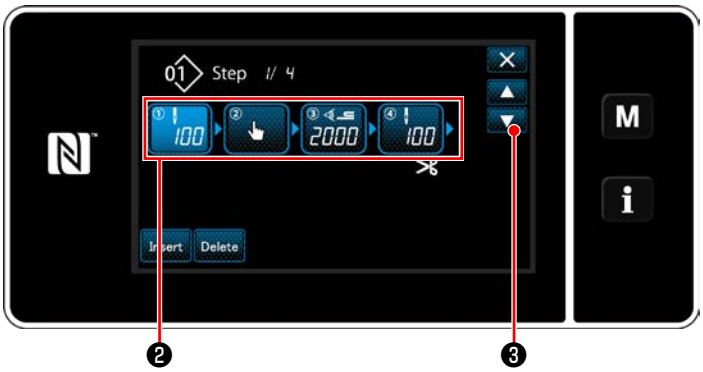

<Polygonal-shape stitching step edit screen>

1) Step changeover condition is displayed in ❷ . Press ❷ to place the number of stitches in the selected state.
The screen returns to the previous one or advances to the next one with ❸ .

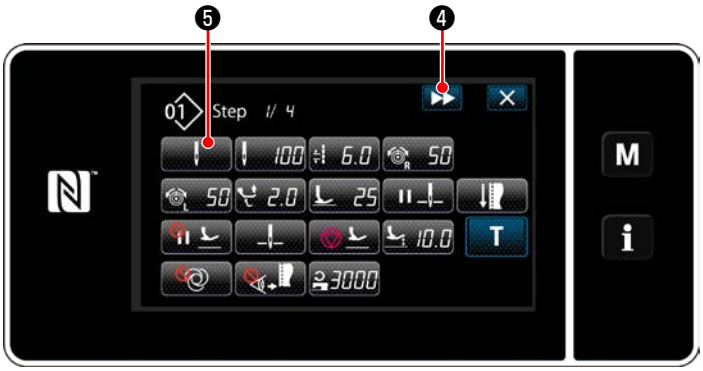

<Sewing data edit screen>

2) When the selected step is pressed again, the "sewing data edit screen" is displayed.
When ❹ is pressed, the "sewing data edit screen" for the next step is displayed.
When ❺ is pressed, the "step changeover reference selection screen" is displayed.

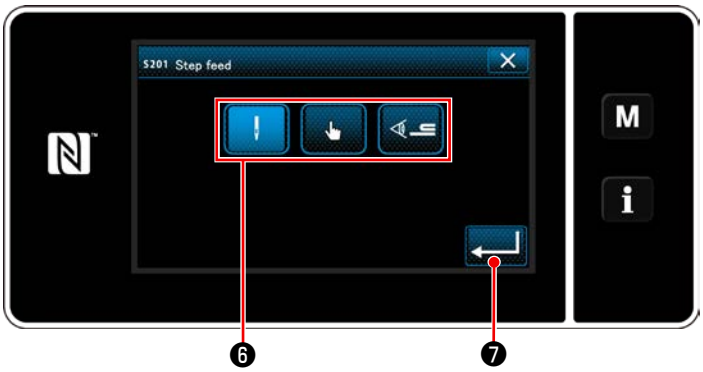

<Step changeover reference selection screen>

3) Selecting step changeover reference ❻ .

: Number of stitches

: One-touch changeover

: Multi-layered section detection

4) When ❼ is pressed, the operation is confirmed. Then, the screen returns to the "sewing data edit screen".

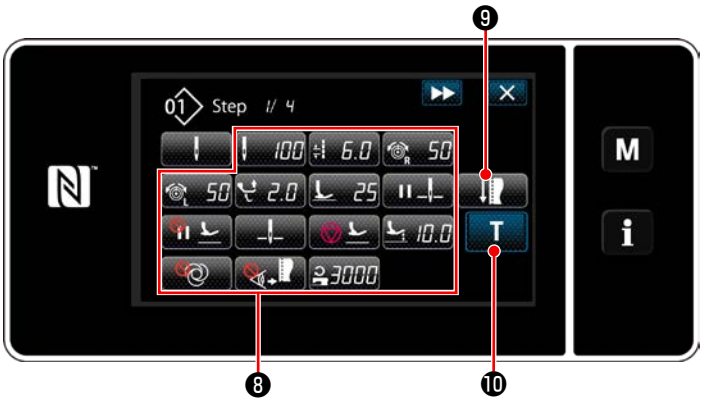

<Sewing data edit screen>

5) Setting other sewing data ❽ .
The type of sewing data displayed on the "sewing data edit screen" changes according to the step changeover reference selected in the aforementioned item number 3. (See the table shown below.)

Caution **The presser lifter operates after thread trimming according to the setting of the final step.**

		Step changeover reference		
		Number of stitches	Hand switch	Multi-layered part detection
	Step changeover sensor value	×	×	○
	Number of stitches	○	×	×
	Stitch length	○	○	○
	Needle thread tension, left	○	○	○
	Needle thread tension, right	○	○	○
	Alternating vertical movement amount	○	○	○
	Presser foot pressure	○	○	○
	Intermediate stop - Needle bar stop position	○	○	○
	Intermediate stop - Presser foot lifting	○	○	○
	Stop - Needle bar position	○	○	○
	Stop - Presser foot lifting	○	○	○
	Stop - Presser foot lifting height	○	○	○
	One shot	○	○	○
	Material edge sensor	○	○	○
	Sewing speed limit	○	○	○

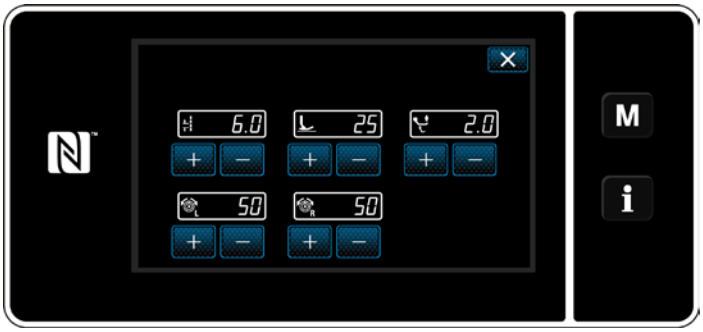

<Sewing adjustment mode screen>

6) When ❾ is pressed, the "sewing adjustment mode screen" is displayed.

To set the sewing data under the sewing adjustment mode, refer to **"(2) Sewing adjustment mode" p. 66**.

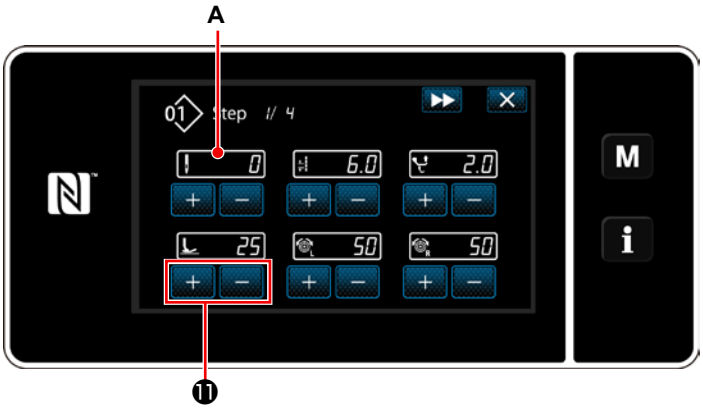

<Teaching input screen - Initial state>

7) When T ❿ is pressed, the "teaching input screen" is displayed.
Input value **A** of the number of stitch becomes 0 (zero).
Depress the pedal to count the number of stitches to be sewn until the sewing machine stops.

Change the sewing conditions with + − ⓫.

- 6.0 : Stitch length
- 25 : Presser foot pressure
- 2.0 : Alternating vertical movement amount
- 50 : Needle thread tension, left
- 50 : Needle thread tension, right

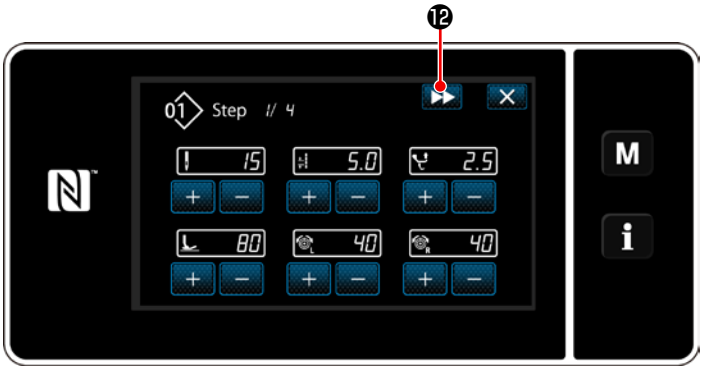

<Teaching input screen - After teaching>

When ▶▶ ⓬ is pressed, the step changes over to the next step.
Confirm the teaching content by performing thread trimming. Then, the screen returns to the "sewing data edit screen" and the sewing condition you have changed is reflected.

<Sewing data edit screen>

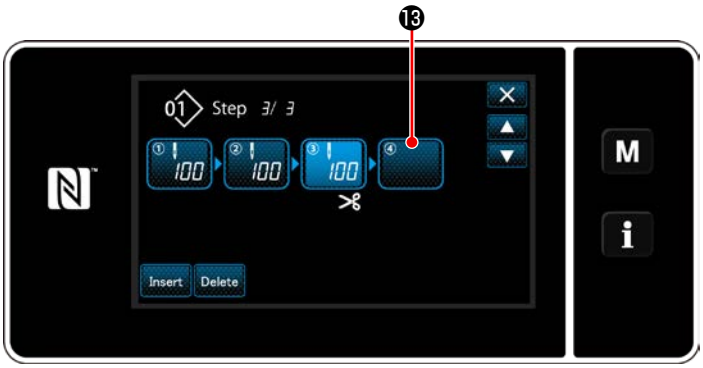

8) In the case a step can be additionally registered to a sewing pattern, step ⓭ which is not yet set is displayed in the last field.

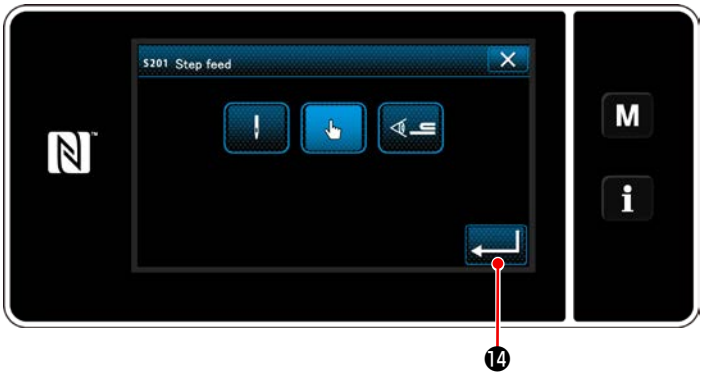

<Step changeover reference selection screen>

9) When displayed step ⓭ is pressed, the "step changeover reference selection screen" is displayed.
Select the step changeover reference in the same manner as aforementioned item number 3.

10) When ⓮ is pressed, the operation is confirmed. Then, the screen returns to the "polygonal shape stitching step edit screen".

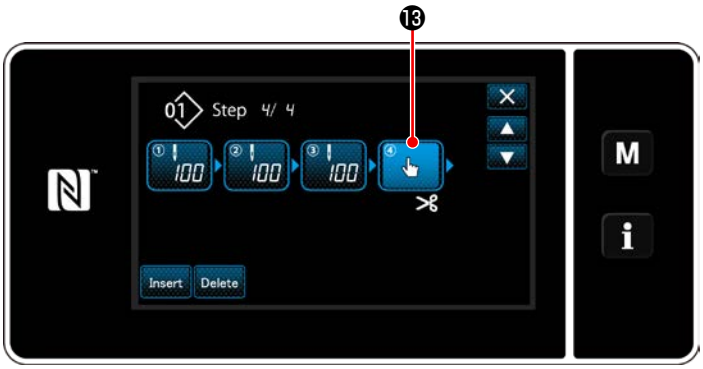

<Polygonal shape stitching step edit screen>

11) When step ⓭ is pressed again, the "sewing data edit screen" is displayed.
Select the step changeover reference in the same manner as aforementioned item number 3.

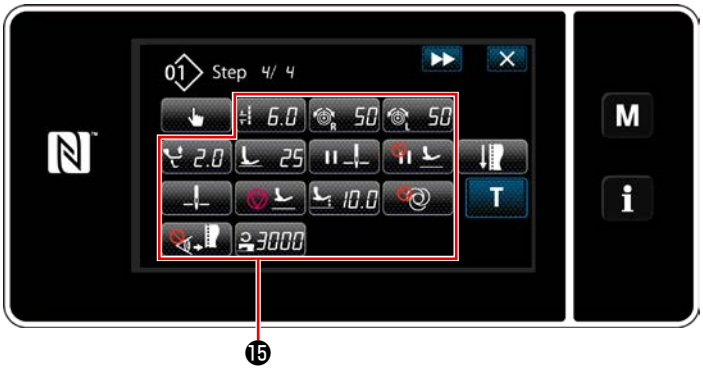

<Sewing data edit screen>

12) Set other sewing data ⓯ in the same manner as item number 5.

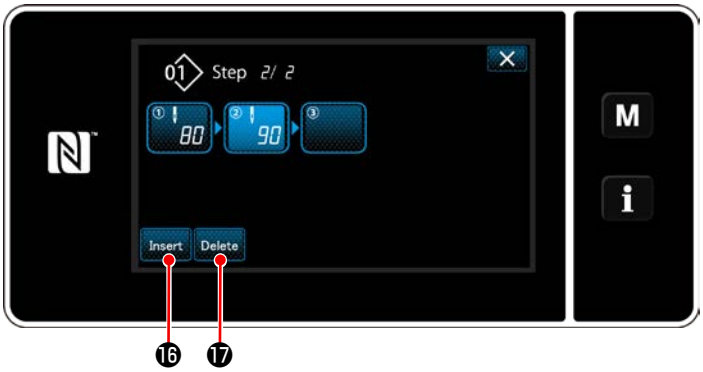

13) When Insert ⓰ is pressed, a step containing 100 stitches is inserted immediately before the selected step.
When the inserted step field button is pressed, the "sewing data edit screen" is displayed.
In the same manner as described above, select the step changeover reference and set the sewing data.

* In the case the maximum number of steps have already been registered, Insert ⓰ is not displayed.

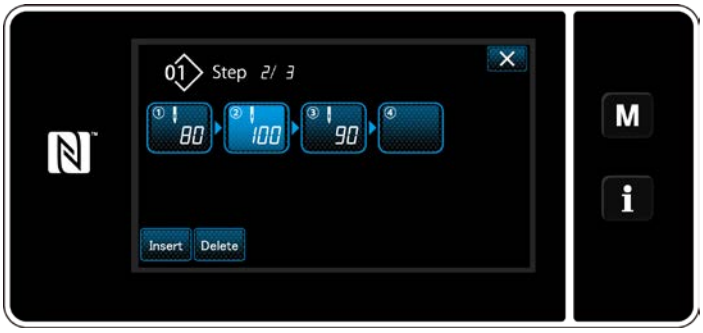

14) When Delete ⓱ is pressed, the selected step is deleted.

* In the case only one step has been registered, Delete ⓱ is not displayed.

③ Confirming the data on the created sewing pattern

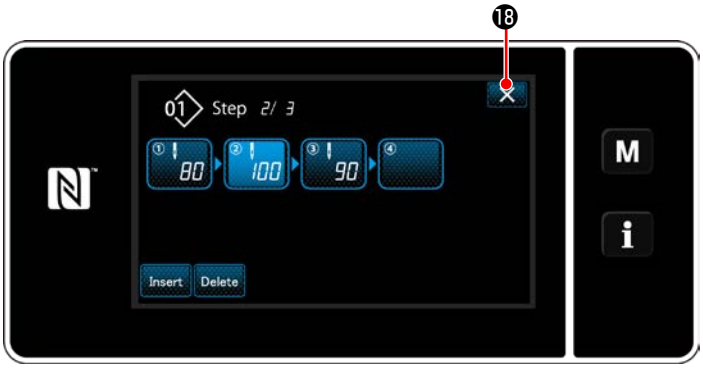

<Polygonal-shape stitching step edit screen>

The operation is completed by pressing ✕ ⓲ . Then, the current screen returns to the sewing screen under the maintenance personnel mode.

9-2-2. Creating a new polygonal-shape stitching pattern

① Selecting the new-pattern creating function

Display the "new sewing pattern creation screen" referring to ① in **"9-1-1. Creation of a new pattern" p. 117**.

② Creating a polygonal shape stitching pattern

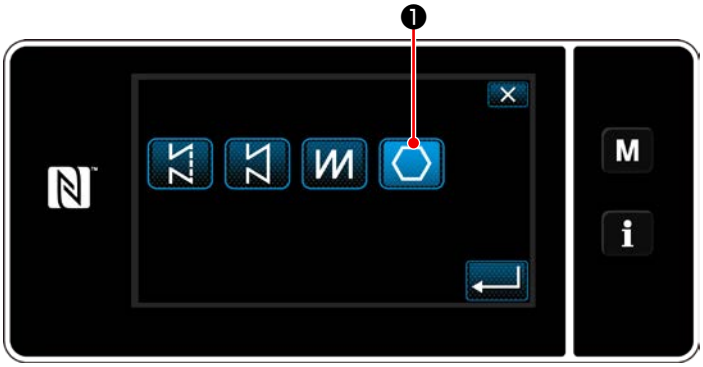

<New pattern creation screen>

Display the "new sewing pattern creation screen" referring to ② in **"9-1-1. Creation of a new pattern" p. 117**.

Select polygonal-shape stitch pattern ❶ on the stitch shape selection screen.
The "new sewing pattern edit screen" is displayed.

③ Setting the pattern function on a step-by-step basis

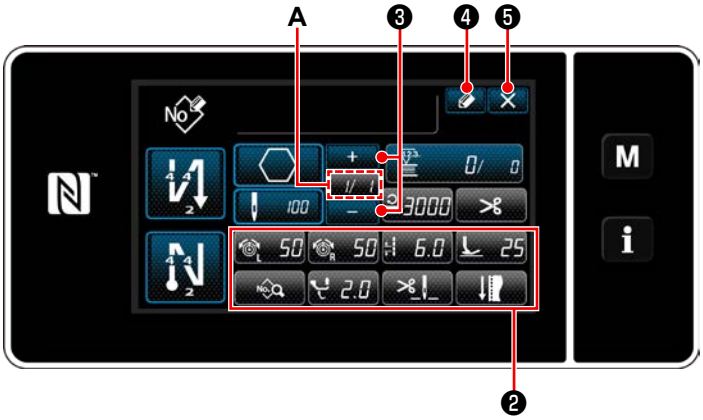

<New sewing pattern edit screen>

1) Set the pattern function with buttons ❷ on a step-by-step basis.
   Refer to **"6-2. Sewing patterns" p. 52**.
2) The total number of steps you have set is displayed on the right of section **A**. The current step is displayed on the left of section **A**. The current step can be changed with ❸ .
3) Press ❹ .
   The "sewing pattern number registration screen" is displayed.
   Press ❺ to display the data discard confirmation screen.
   Steps of procedure to be taken after the aforementioned step are same as steps ③ to ④ in **"9-1-1. Creation of a new pattern" p. 117**.

9-2-3. Setting the step from which polygonal-shape stitching is started

In the case it is necessary to re-sew a pattern from the middle of the pattern after the occurrence of troubles such as thread breakage, it is possible to re-start sewing from an arbitrary step of the pattern.

<Sewing screen (Polygonal-shape stitching pattern)>

The current step can be changed by pressing ❶ on the sewing screen for polygonal-shape stitching pattern.

9-3. Cycle pattern

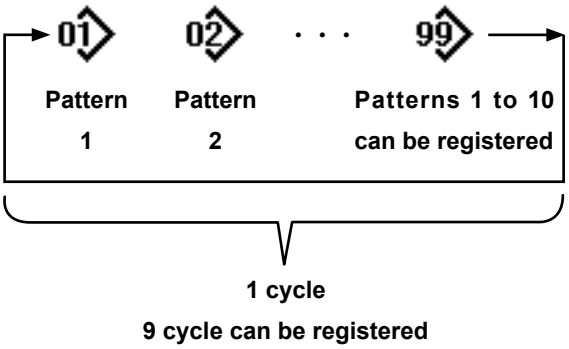

It is possible to combine several different sewing patterns as one cycle pattern for sewing.
As many as 10 patterns can be input in one cycle pattern. This function is helpful in the case several different patterns are regularly repeated in a product sewing process.
As many as 9 cycle patterns can be registered. Copy the cycle pattern when necessary.

9-3-1. Selecting the cycle pattern

<Sewing screen (Sewing patterns)>

1) Press 01 ❶ on each sewing screen.

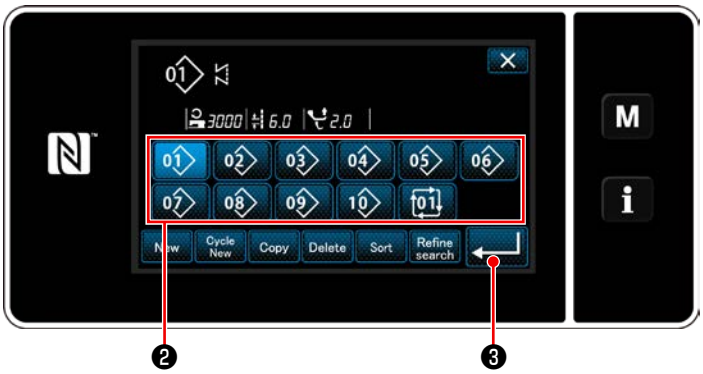

<Sewing pattern number management screen (in numerical order)>

2) The "Sewing pattern number management screen (in numerical order)" is displayed.
As many as 10 patterns can be entered in one cycle sewing pattern.
Cycle pattern(s) is displayed after the registered sewing patterns.
Press a desired cycle sewing data number button ❷ .
Press ❸ to confirm the setting.
The "cycle sewing screen" is displayed.

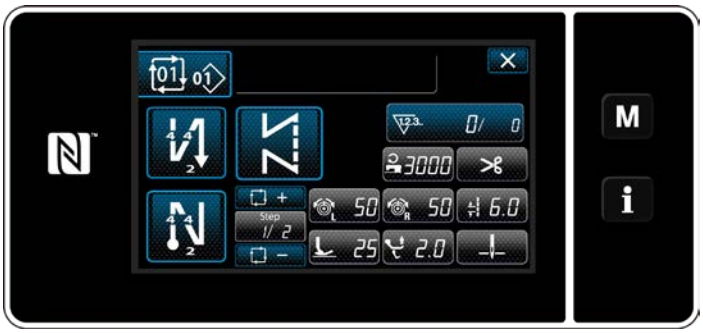

<Sewing screen (Cycle pattern)>

3) Sewing of the selected cycle pattern is enabled.

9-3-2. Editing cycle sewing data

① Displaying the sewing screen (cycle pattern) for cycle pattern

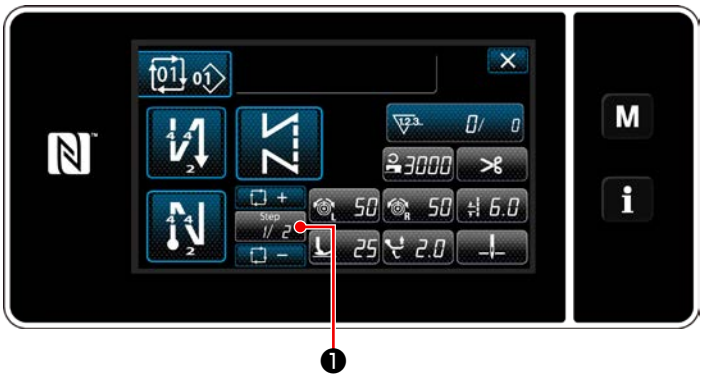

<Sewing screen (Cycle pattern)>

Press Step key ❶ on each sewing screen.

The "cycle sewing step edit screen" is displayed.

② Setting a cycle sewing pattern

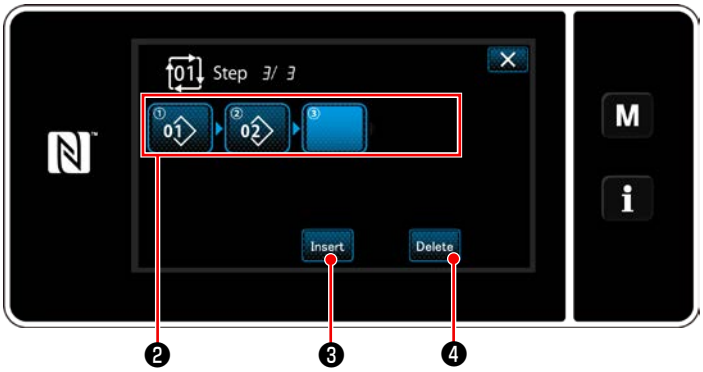

<Cycle sewing step edit screen>

1) Sewing pattern numbers (10 numbers at the maximum) which have registered are displayed in ❷ .
   Press ❷ to confirm the selection.
2) In the case a step can be additionally registered to a sewing pattern, a step which is not yet set is displayed in the last field.
   When the step which is not yet set is pressed, the "cycle registration pattern selection screen (in the numerical order) is displayed.
3) Select the pattern you want to register from ❺.
   Press ❻ to confirm the setting.
4) Press Insert ❸ while selecting a step. Then, the "registered cycle pattern selection screen (In numerical order)" is displayed.
   Insert a pattern ahead of the selected step.
5) The pattern is deleted by pressing Delete ❹ .

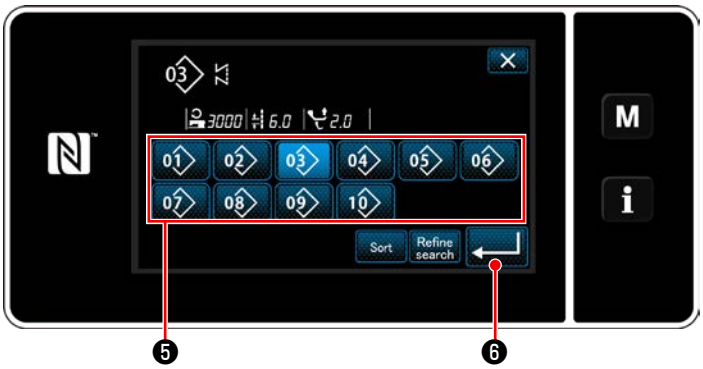

<Registered cycle pattern selection screen (In numerical order)>

③ Confirming the data entered

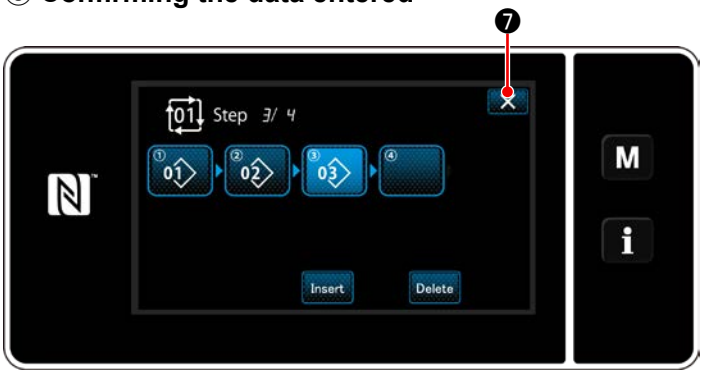

<Cycle sewing step edit screen>

Press ✕ ❼ to complete the operation. Then, the current screen returns to the sewing screen for cycle sewing.

9-3-3. Creating a new cycle pattern

*** This operation is to be carried out under the maintenance personnel mode.**

① Selecting the new cycle pattern creating function

<Sewing screen (Maintenance personnel mode)>

1) Press 01 ❶ on the sewing screen under the maintenance personnel mode.
The "Sewing pattern number management screen (in numerical order)" is displayed.

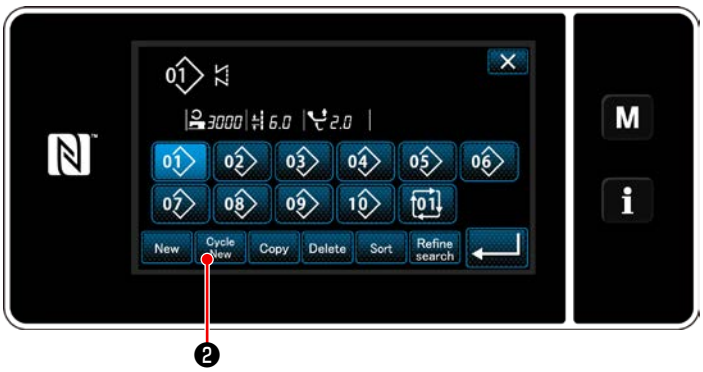

<Sewing pattern number management screen (in numerical order)>

2) Press Cycle New ❷ .
The "New cycle sewing pattern edit screen" is displayed.

② Registering a pattern in new cycle sewing data

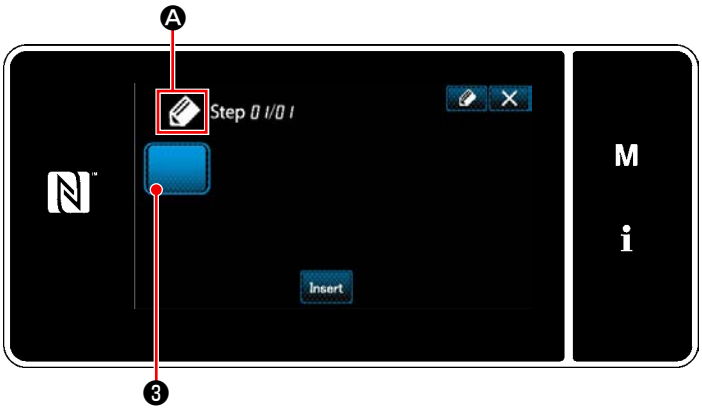

<New cycle sewing pattern edit screen>

1) Ⓐ which indicates that a new pattern is being created is displayed on the screen.

2) Press ❸ .
The "Registered cycle pattern selection screen (In numerical order)" is displayed.

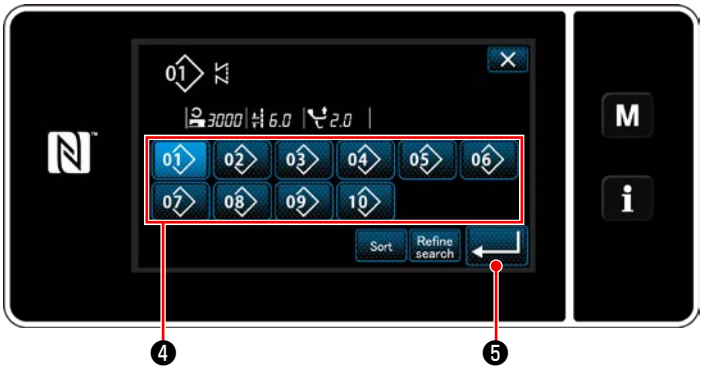

<Registered cycle pattern selection screen (In numerical order)>

3) Display a desired pattern number referring to **"6-2-2. List of sewing patterns" p. 53**.

   Press 01 ❹ .

4) Press ↵ ❺ to confirm the setting.

   The current screen returns to the "new cycle sewing step edit screen".

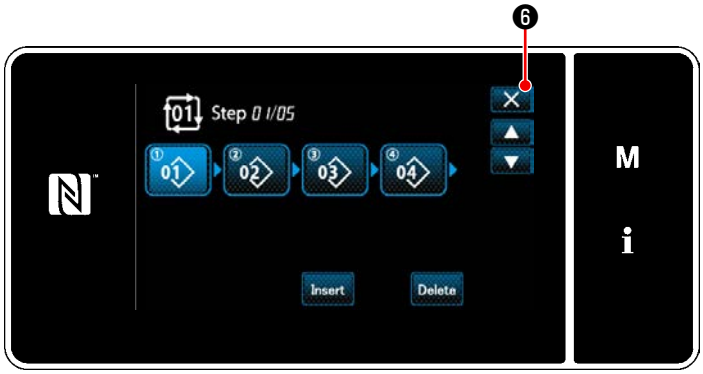

<Cycle sewing step edit screen>

5) The selected pattern is added to cycle sewing data with suffixed.

   Create the cycle sewing data by repeating steps 2 to 5.

6) Press ✕ ❻ to display the data discard confirmation screen.

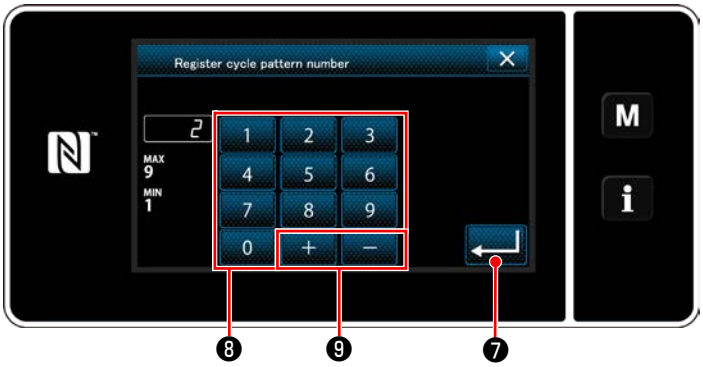

<Cycle sewing pattern number registration screen>

7) Enter the sewing pattern number to be registered using numeric keypad ❽ .
   An unassigned registration number that is closest to the entered value in the plus/minus direction is displayed by pressing + − ❾ .

8) The created pattern is registered by pressing ↵ ❼ .

   Then, the current screen returns to the "sewing pattern number list screen". In the case the entered number has already been registered, the prompt message for overwrite confirmation is displayed.

9-3-4. Setting the step from which cycle sewing pattern is started

In the case it is necessary to re-sew a cycle sewing pattern from the middle of the cycle sewing pattern after the occurrence of troubles such as thread breakage, it is possible to re-start sewing from an arbitrary step of the cycle sewing pattern.

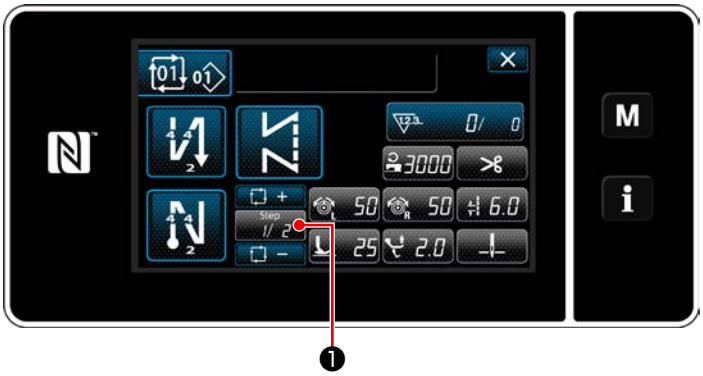

<Sewing screen (Cycle patterns)>

Sewing step can be selected with +/- key of ❶ .

9-4. Custom pitch

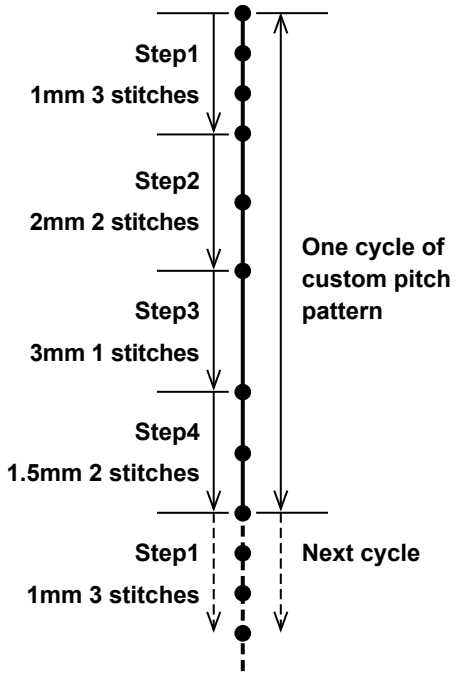

<Figure: Example of the custom pitch>

A pattern design consisting of two or more different stitch-length groups (10 steps at the maximum) can be registered as a custom pitch. As many as 20 different custom pitches can be registered.
As many as 100 stitches of the same stitch length can be set in one step.

*** This operation is to be carried out under the maintenance personnel mode.**

Caution

1. **With some combinations of stitch length, direction of feed and sewing speed, the sewing machine may fail to finish a sewing pattern exactly according to the settings.**
2. **Needle cannot be entered to the same needle entry point when the stitch length is set to 0.0 mm.**

9-4-1. Selecting a custom pitch

Select an already-created custom pitch.
Custom pitch can be used fro pattern sewing, reverse-feed stitching at the beginning of sewing and reverse-feed stitching at the end of sewing. In this section, application of a custom pitch to a sewing pattern is described as an example.

① Displaying the stitch length input screen

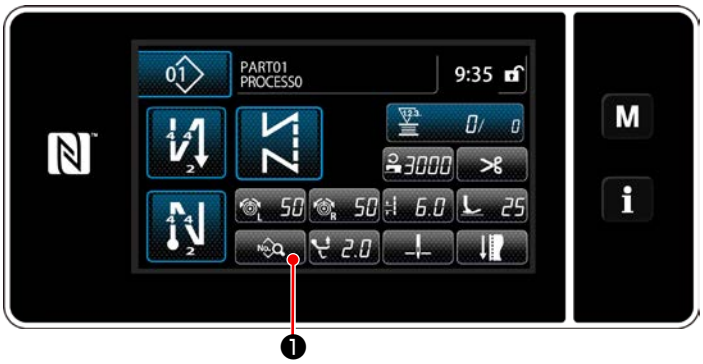

<Sewing screen (Maintenance personnel mode)>

1) Press ❶ on the sewing screen under the maintenance personnel mode.
The "sewing data edit screen" is displayed.

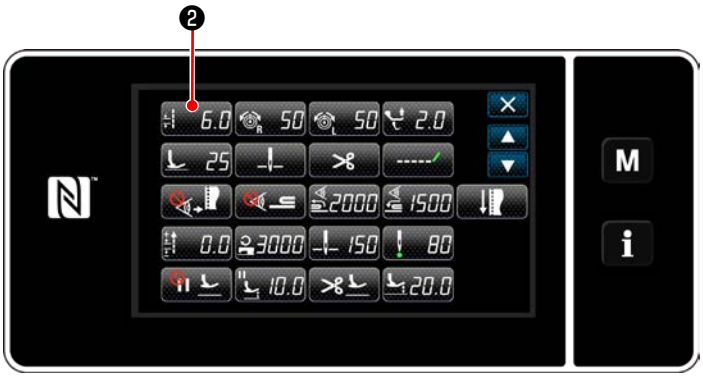

<Sewing data edit screen>

2) Press 6.0 ❷ .

The "stitch length input screen" is displayed.

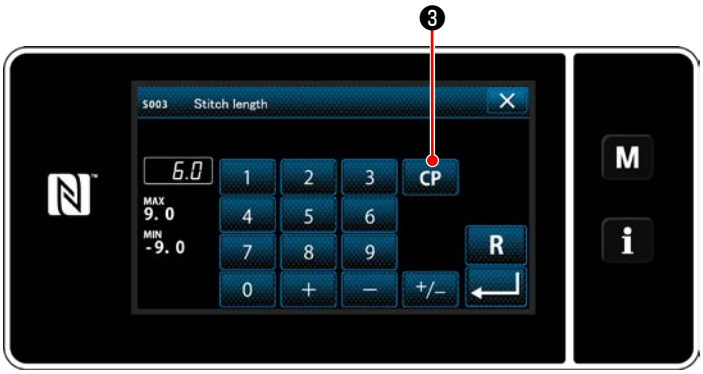

<Stitch length input screen>

3) In the case a custom pitch pattern(s) has been registered, CP ❸ is displayed.

Press CP ❸ .

The "custom pitch setting screen" is displayed.

② Selecting a custom pitch

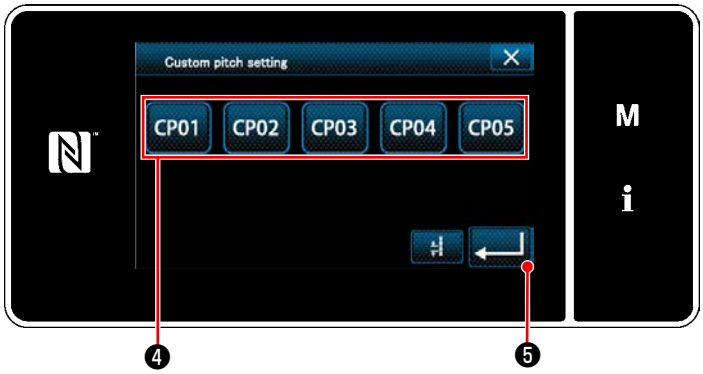

<Custom pitch setting screen>

Registered custom pitch pattern(s) is displayed.

Press CP01 ❹ .

Press ↵ ❺ to confirm the setting.

Return the current screen to the sewing screen (maintenance personnel mode).

9-4-2. Creating a new custom pitch

A new custom pitch pattern creation procedure is described as follows using < Figure: Example of the custom pitch > as an example.

① Selecting the custom pitch setting on the mode screen

<Mode screen>

1) Press M ❶ .
   The "mode screen" is displayed.
2) Select the "5. Custom pitch setting".
   The "custom pitch list screen" is displayed.

② Selecting the new custom pitch creating function

<Custom pitch list screen>

Registered custom pitch pattern(s) is displayed.

Press New ❷ .

The "new custom pitch pattern creation number input screen" is displayed.

③ Inputting a custom pitch pattern number

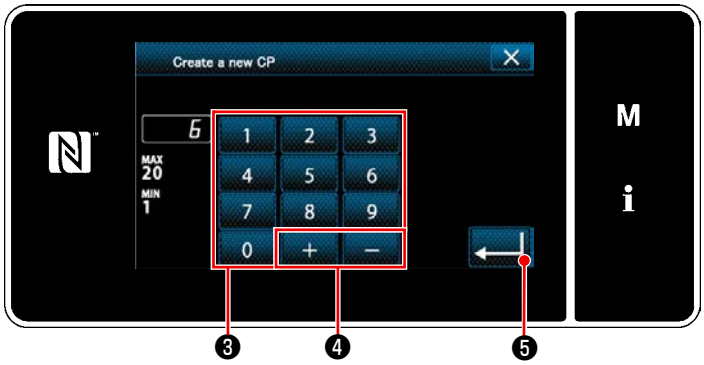

<New custom pitch pattern creation number input screen>

1) Enter the pattern number with numeric keypad ❸ .
   An unassigned registration number that is closest to the entered value in the plus/minus direction is displayed by pressing + − ❹ .
2) Press ↵ ❺ .
   The "custom pitch edit screen" is displayed.
   In the case the entered number has already been registered, the prompt message for overwrite confirmation is displayed.

④ Creating a custom pitch

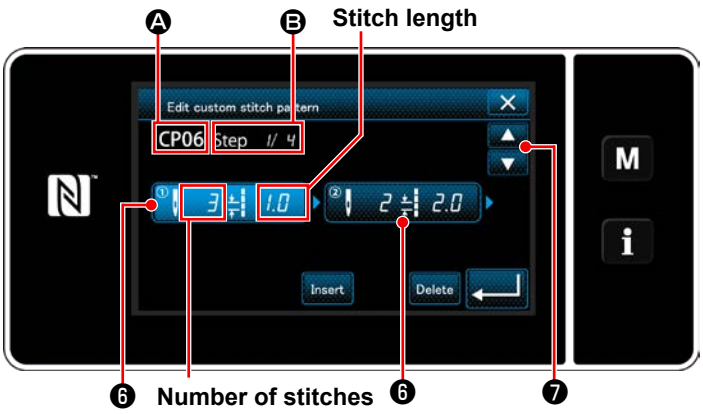

<Custom pitch edit screen>

1) Press ❻ to put the step you have pressed in the selected state.
2) The selected custom pitch number is displayed in Ⓐ, and the step number which is being edited and the total number of steps are displayed in Ⓑ.
3) The "number of stitches" and "stitch length" for the step are displayed in ❻ . Press ❻ to put the displayed data in the selected state.

   Press ❼ to display the screen of the previous custom pitch number or of the next custom pitch number.
4) "Custom pitch data input screen" is displayed by pressing ❻ while the step is being selected.

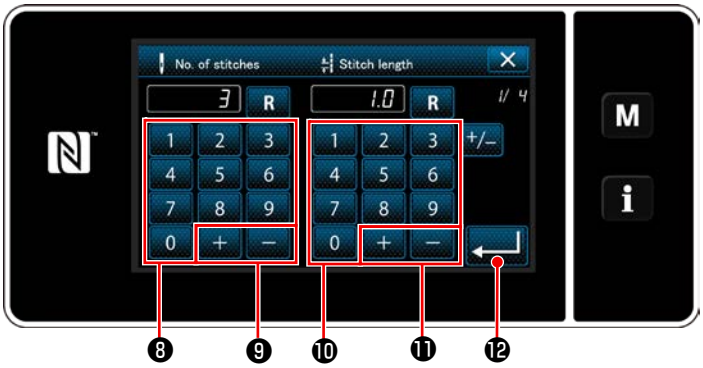

<Custom pitch data input screen>

1. In the case of setting the number of stitches
Custom pitch pattern input procedure is described as follows using < Figure: Example of the custom pitch > as an example.
   The number of stitches can be input in the range of 1 and 100.
   Set the number of stitches for step 1 to 3 with numeric keypad ❽ for the number of stitches and + – ❾ .

   Press ⓬ to confirm the setting.
2. In the case of setting the stitch length
   The pitch can be input in the range from –9.0 to 9.0 mm.
   Set the stitch length for step 1 to 1.0 mm using numeric keypad ❿ and + – ⓫ .

   Press ⓬ to confirm the setting.
3. Carry out the following setting in the similar manner.
   The number of stitches for step 2: 2 stitches
   Stitch length for step 2: 2.0 mm
   The number of stitches for step 3: 1 stitch
   Stitch length for step 3: 3.0 mm
   The number of stitches for step 4: 2 stitches
   Stitch length for step 4: 1.5 mm

⑤ Confirming the numeric value

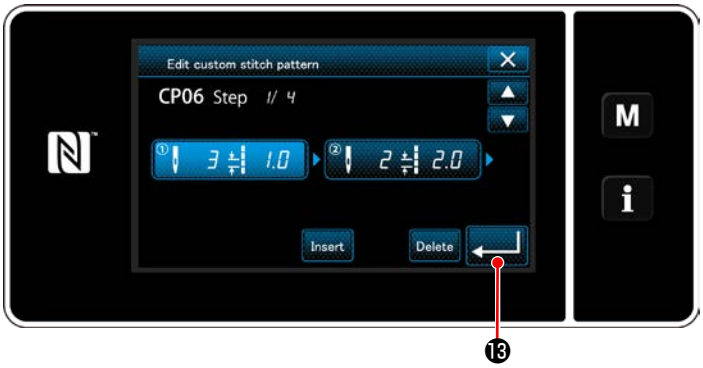

<Custom pitch edit screen>

After the completion of editing, press ⓭ .

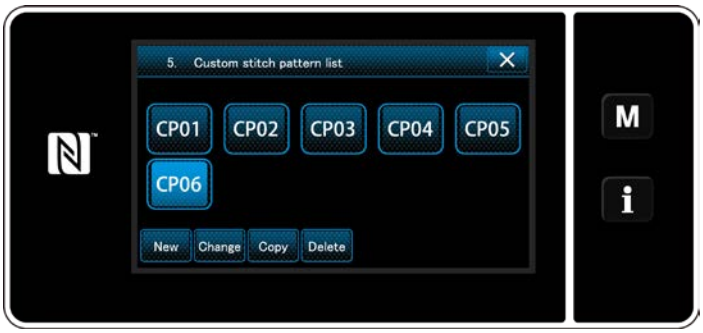

<Custom pitch list screen>

The custom pitch list screen is displayed with the custom pitch number you have created added.

9-4-3. Custom pitch edit function

① Selecting the custom pitch edit function

<Custom pitch edit screen>

Display the "custom pitch edit screen" referring to **"9-4-2. Creating a new custom pitch" p. 135**.

② Editing the custom pitch value

In this section, procedure for editing the custom pitch value is described.
Refer to **"9-4-2. Creating a new custom pitch" p. 135** for the explanation of screen.

1) In the case of setting the number of stitches
   The number of stitches can be input in the range from 1 to 100.
   Change the number of stitches for step 1 using the numeric keypad and + − for the number of stitches.
   Press ↵ to confirm the setting.
2) In the case of setting the stitch length
   The stitch length can be input in the range from -9.0 to 9.0 mm.
   Change the stitch length for step 1 using the numeric keypad and + − for the stitch length.
   Press ↵ to confirm the setting.
3) Change the settings for each step in the same manner as described above.

Steps of procedure to be taken after the aforementioned step are same as those described in **"9-4-2. Creating a new custom pitch" p. 135**.

9-4-4. Copying/deleting a custom pitch

(1) Copying a custom pitch

① **Displaying the custom pitch list screen**

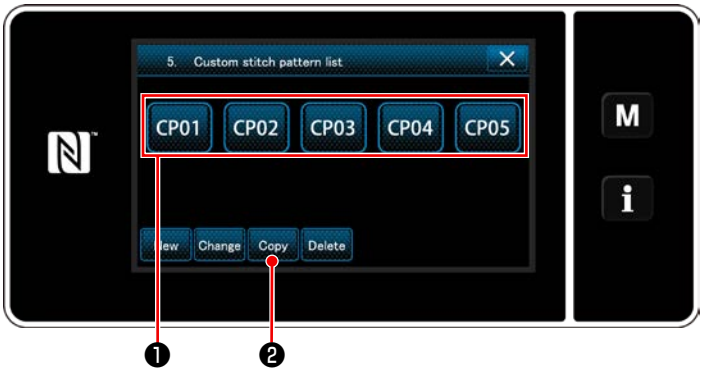

<Custom pitch list screen>

1) Display the "custom pitch list screen" referring to **"9-4-2. Creating a new custom pitch" p. 135**.
2) Press CP01 ❶ of the copy source to put it in the selected state.
3) Press Copy ❷ .
   The "custom pitch copy destination number input screen" is displayed.

② **Inputting the custom pitch number**

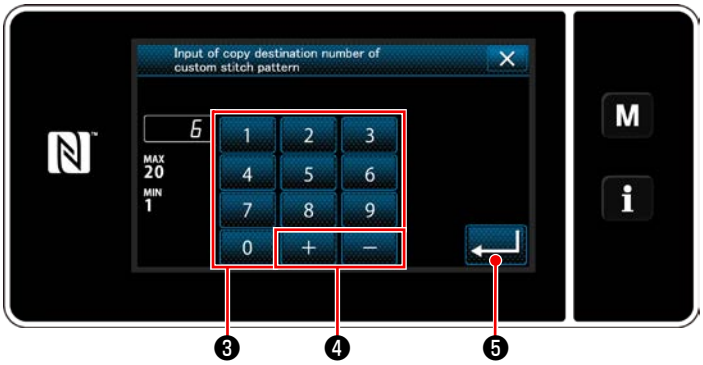

<Custom pitch copy destination number input screen>

Enter the number of destination pattern for copying with numeric keypad ❸ and + − ❹ .

Press ↵ ❺ .

The created pattern is registered, and the current screen is returned to the custom pitch screen.
In the case the entered number has already been registered, the prompt message for overwrite confirmation is displayed.

(2) Deleting a custom pitch

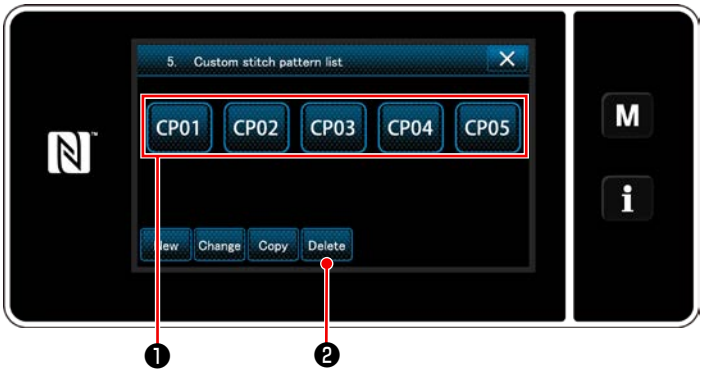

<Custom pitch list screen>

1) Display the "custom pitch list screen" referring to **"9-4-2. Creating a new custom pitch" p. 135**.
2) Press CP01 ❶ to put the custom pitch to be deleted in the selected state.
3) Press Delete ❷ .
   The "deletion confirmation screen" is displayed.
   Press ↵ to confirm the setting.

9-5. Condensation custom pattern

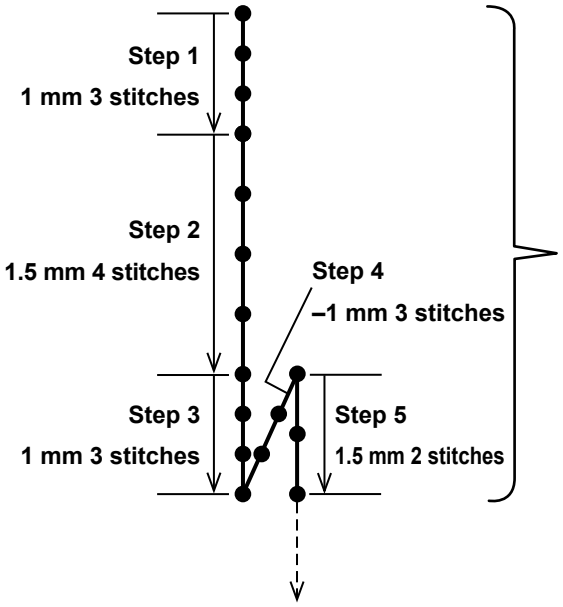

<Figure: Example of the condensation custom pattern>

Condensation stitches can be sewn while specifying needle entry points as desired, by setting a condensation custom. As many as 20 steps can be created in one pattern. The maximum number of patterns that can be registered is nine.

Condensation custom pattern

Caution

1. **With some combinations of stitch length, direction of feed and sewing speed, the sewing machine may fail to finish a sewing pattern exactly according to the settings.**
2. **Needle cannot be entered to the same needle entry point when the stitch length is set to 0.0 mm.**

9-5-1. Selecting the condensation custom

Select condensation custom pattern referring to **"6-2-3. (2) ◆ In the case of maintenance personnel mode" p. 56**.

The condensation custom pattern for reverse-feed stitching at the end of sewing can be set in the similar manner.

9-5-2. Creating a new condensation custom

A new condensation custom pattern creation procedure is described as follows using < Figure: Example of the condensation custom pattern > as an example.

① Selecting the condensation custom pattern setting on the mode screen

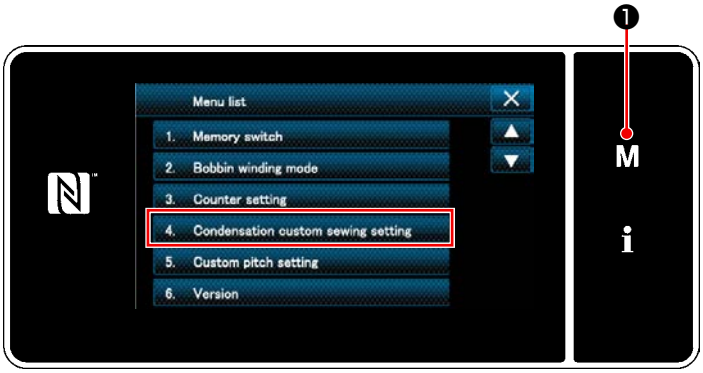

<Mode screen>

1) Press **M** ❶.
   The "mode screen" is displayed.
2) Select the "4. Condensation custom sewing setting".
   The "condensation custom pattern list screen" is displayed.

② Selecting the new condensation custom creating function

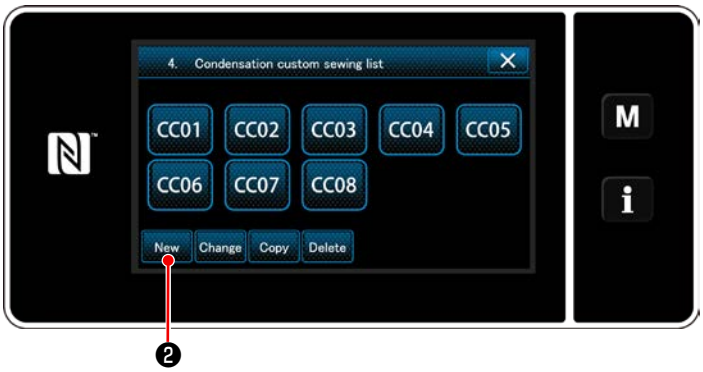

<Condensation custom pattern list screen>

Registered condensation custom patterns are displayed on the screen.

Press New ❷ .

The "new condensation custom pattern creation pattern number input screen" is displayed.

③ Inputting the condensation custom number

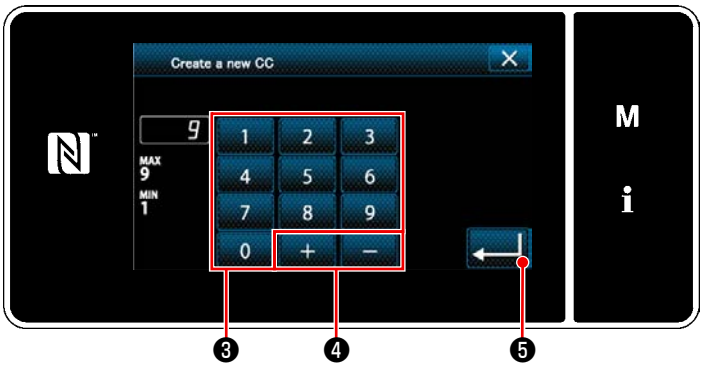

<New condensation custom pattern creation pattern number input screen>

1) Enter the pattern number with numeric keypad ❸ .
   An unassigned registration number that is closest to the entered value in the plus/minus direction is displayed by pressing + − ❹ .
2) Press ↵ ❺ .
   The "condensation custom edit screen" is displayed.
   In the case the entered number has already been registered, the prompt message for overwrite confirmation is displayed.

④ Creating a condensation custom

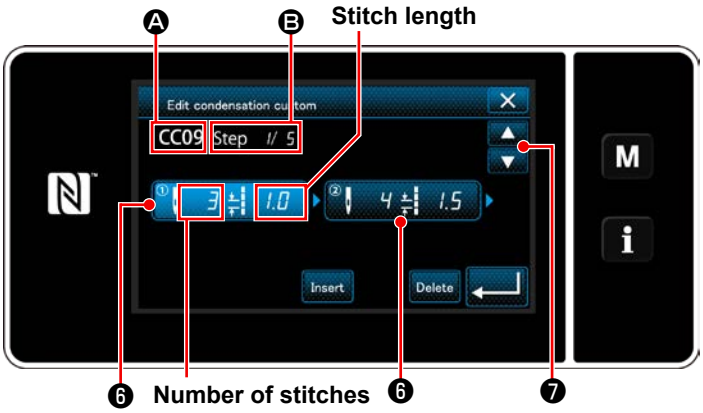

<Condensation custom edit screen>

1) Press ❻ to put the step you have pressed in the selected state.
2) The selected condensation custom number is displayed in Ⓐ and the step number which is being edited, and the total number of steps are displayed in Ⓑ.
3) The "number of stitches" and "stitch length" for the step are displayed in ❻ . Press ❻ to put the displayed data in the selected state.
   Previous step number screen or the next step number screen is displayed with ▲▼ ❼ .
4) "Condensation custom data input screen" is displayed by pressing ❻ while the step is being selected.

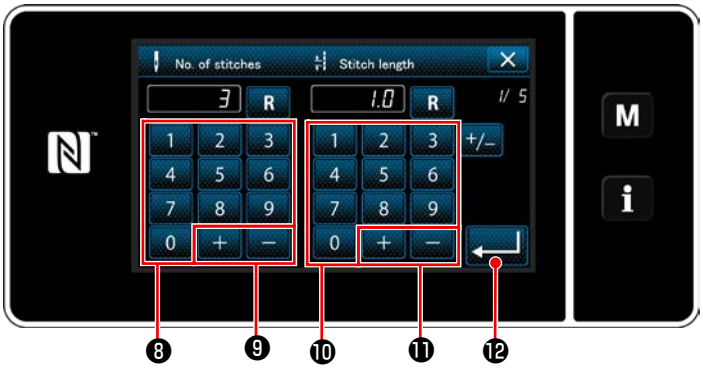

<Condensation custom pattern list screen>

1. In the case of setting the number of stitches
Condensation custom pattern input procedure is described as follows using < Figure: Example of the condensation custom pattern > as an example.
The number of stitches can be input in the range from 1 to 100.
Set the number of stitches for step 1 to 3 with numeric keypad ❽ for the number of stitches and + − ❾ .
Press ↵ ⓬ to confirm the setting.

2. In the case of setting the stitch length
The pitch can be input in the range from –9.0 to 9.0 mm. Set the stitch length for step 1 to 1.0 mm using numeric keypad ❿ and + − ⓫ . Press ↵ ⓬ to confirm the setting.
A negative number of stitches can also be set. In this case, the direction of feed is reverse direction.
3. Carry out the following setting in the similar manner.
The number of stitches for step 2: 4 stitches
Stitch length for step 2: 1.5 mm
The number of stitches for step 3: 3 stitches
Stitch length for step 3: 1.0 mm
The number of stitches for step 4: 3 stitches
Stitch length for step 4: -1.0 mm
The number of stitches for step 5: 2 stitches
Stitch length for step 5: 1.5 mm

⑤ Confirming the numeric value

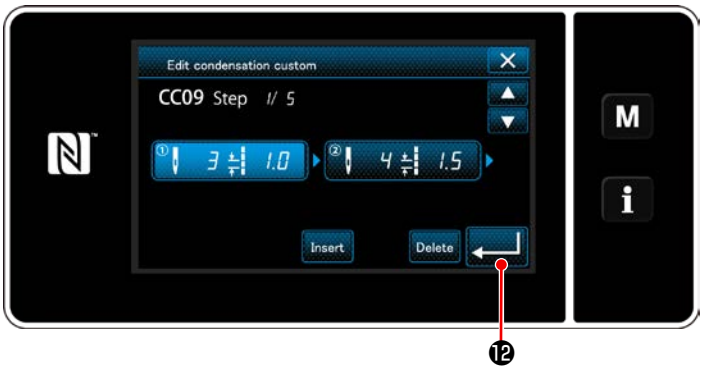

<Condensation custom edit screen>

Press ↵ ⓬ to confirm the setting.

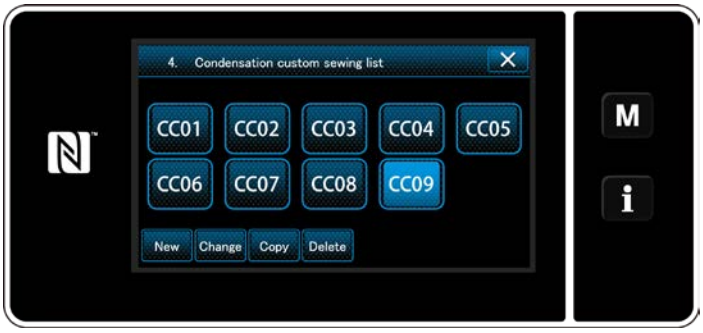

<Condensation custom pattern list screen>

The condensation custom list screen is displayed with the condensation custom number you have created added.

9-5-3. Condensation custom edit function

① Selecting the condensation custom edit function

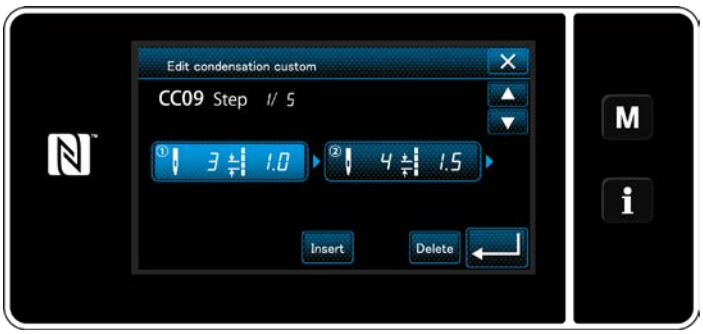

<Condensation custom edit screen>

Display the "condensation custom edit screen" referring to **"9-5-2. Creating a new condensation custom" p. 140**.

② Editing the condensation custom value

In this section, procedure for editing the condensation custom value is described.
Refer to **"9-5-2. Creating a new condensation custom" p. 140** for the explanation of screen.

1) In the case of setting the number of stitches
   The number of stitches can be input in the range from 1 to 100.
   Change the number of stitches for step 1 using the numeric keypad and + − for the number of stitches.
   Press ↵ to confirm the setting.
2) In the case of setting the stitch length
   The stitch length can be input in the range from -9.0 to 9.0 mm.
   Change the stitch length for step 1 using the numeric keypad and + − for the stitch length.
   Press ↵ to confirm the setting.
   * A negative number of stitches can also be set. In this case, the direction of feed is reverse direction.
3) Change the settings for each step in the same manner as described above.

Steps of procedure to be taken after the aforementioned step are same as those described in **"9-5-2. Creating a new condensation custom" p. 140**.

9-5-4. Copying/deleting a condensation custom

(1) Copying a condensation custom

① **Displaying the condensation custom pattern list screen**

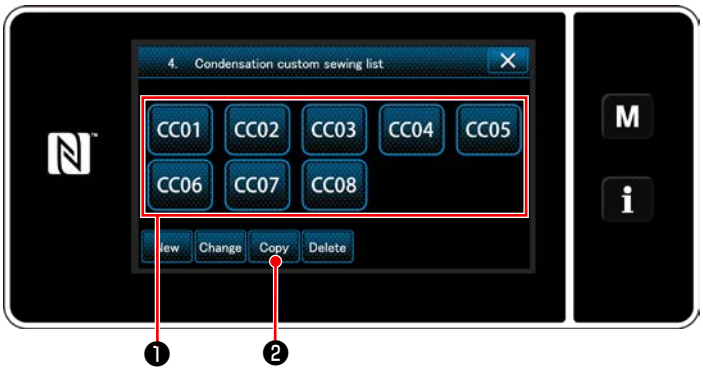

<Condensation custom pattern list screen>

1) Display the "condensation custom pattern list screen" referring to **"9-5-2. Creating a new condensation custom" p. 140**.
2) Press CC01 ❶ of the copy source to put it in the selected state.
3) Press Copy ❷ .

   The "condensation custom copy destination number input screen" is displayed.

② **Inputting the condensation custom pattern number**

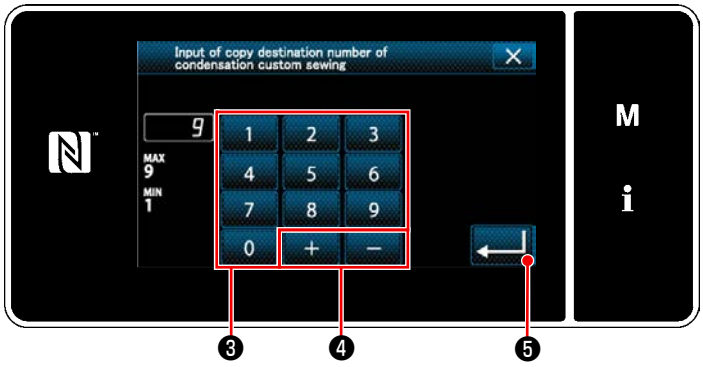

<Condensation-custom pattern copy destination number input screen>

1) Enter the number of destination pattern for copying with numeric keypad ❸ and + − ❹ .
2) Press ↵ ❺ .

   The created condensation custom pattern is registered. Then, the current screen is returned to the sewing screen.
   In the case the entered number has already been registered, the prompt message for overwrite confirmation is displayed.

(2) Deleting a condensation custom

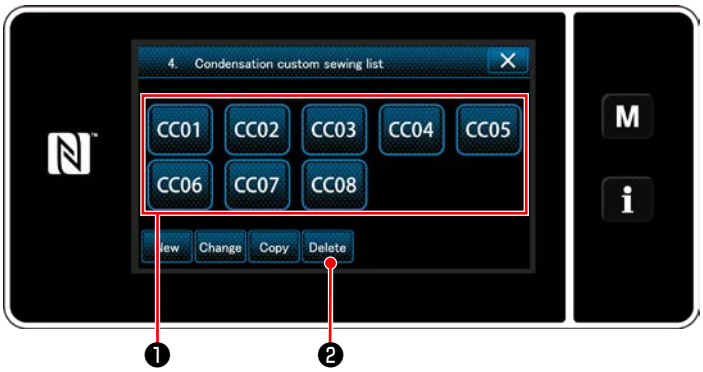

<Condensation custom pattern list screen>

1) Display the "condensation custom pattern list screen" referring to **"9-5-2. Creating a new condensation custom" p. 140**.
2) Press CC01 ❶ to put the custom pitch to be deleted in the selected state.
3) Press Delete ❷ .

   The "deletion confirmation screen" is displayed.

   Press ↵ to confirm the setting.

9-6. Simple lock of the screen

Once the simple lock is enabled, operation of the buttons displayed on the screen is disabled, thereby preventing maloperation.

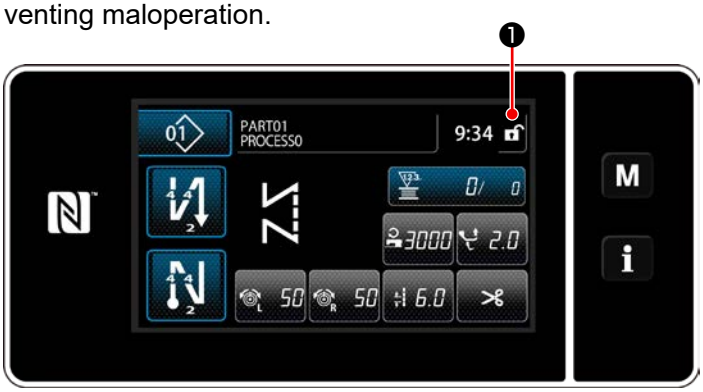

<Sewing screen>

Simple lock is activated by keeping ❶ held pressed for one second on the sewing screen. Pictograph display ❶ will be as shown below:

: Simple lock is enabled

: Simple lock is disabled

* It is possible to set so that the simplified lock is automatically activated according to the elapsed time. (With memory switch U402)
Refer to **"6-5. List of memory switch data" p. 91** for details.

9-7. Version information

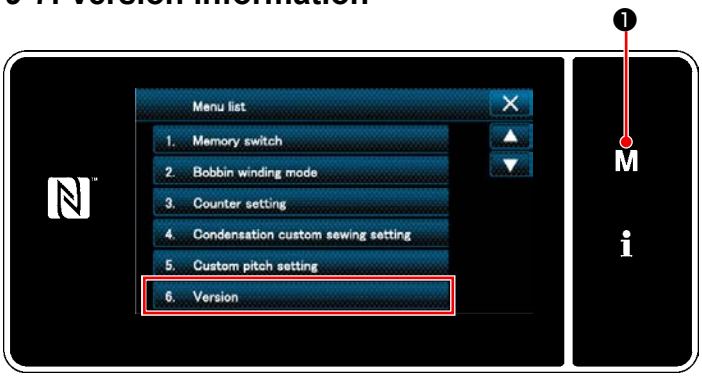

<Mode screen>

1) Press M ❶ .
The "mode screen" is displayed.
2) Select the "6. Version".
The "version information screen" is displayed.

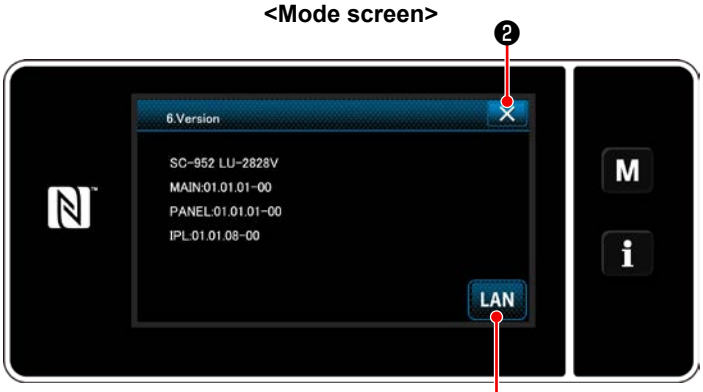

<Version information screen>

3) The screen returns to the previous screen by pressing ✕ ❷ .
When LAN ❸ is pressed, the "communication version information screen" is displayed.

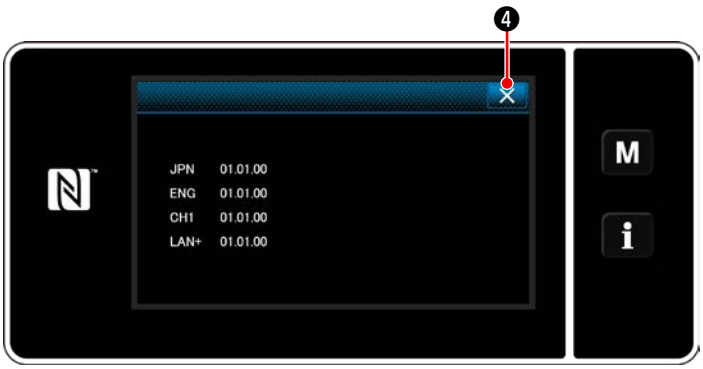

<Communication version information screen>

4) When ✕ ❹ is pressed on the "communication version information screen", the screen returns to the "version information screen".

9-8. Adjustment of brightness of the LED panel

Screen brightness of the LED panel can be changed.

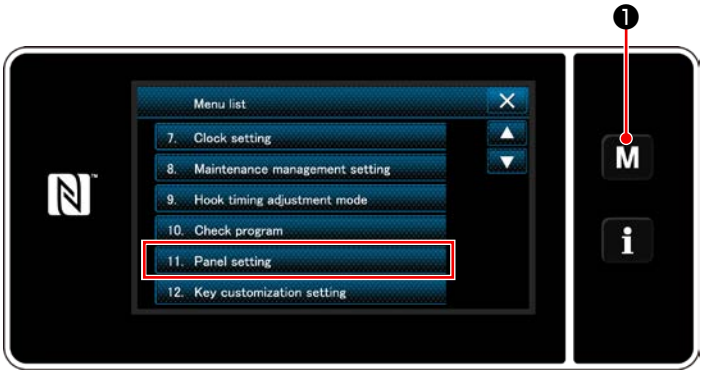

<Mode screen>

1) M ❶ held pressed for three second.
   The "mode screen" is displayed.
2) Select the "11. Panel setting".
   The "operation panel setting screen" is displayed.

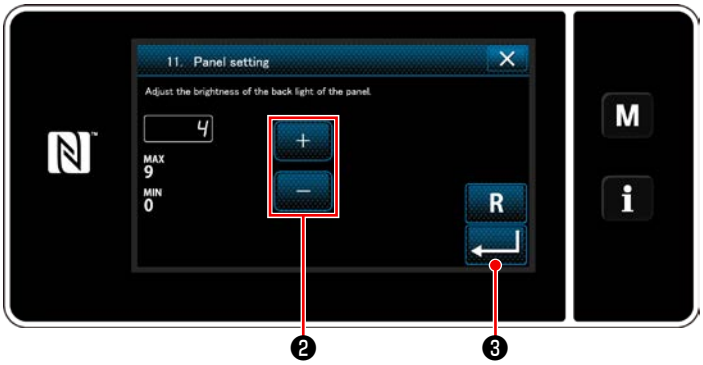

<Operation panel setting screen>

3) Brightness of the operation panel is adjustable with + − ❷ .
4) Press ↵ ❸ to confirm the setting.
   Return the "mode screen".

9-9. Information

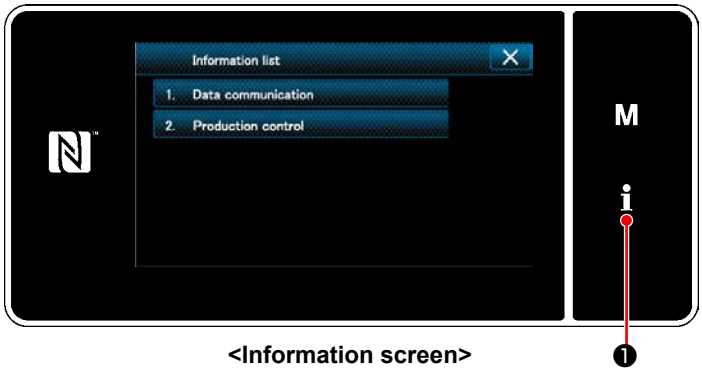

<Information screen>

Press ❶.

The "information screen" is displayed.

Data communication and production management are carried out on the information screen.

9-9-1. Data communication

Data can be input/output by means of a USB thumb drive.
Data that can be handled on the information screen is as follows:

Data name	Extension	Description of data
Sewing data	LU00XXX.EPD (XXX:001~999)	Model-specific sewing data format of the sewing pattern shape, number of stitches, etc. created on the sewing machine.
Custom pitch data	VD00XXX.VDT (XXX:001~999)	The data format that can be operated in common between JUKI sewing machines.
Condensation custom data	VD00XXX.VDT (XXX:001~999)	The data format that can be operated in common between JUKI sewing machines.

(1) Communication method

① Selecting the data format used for communication

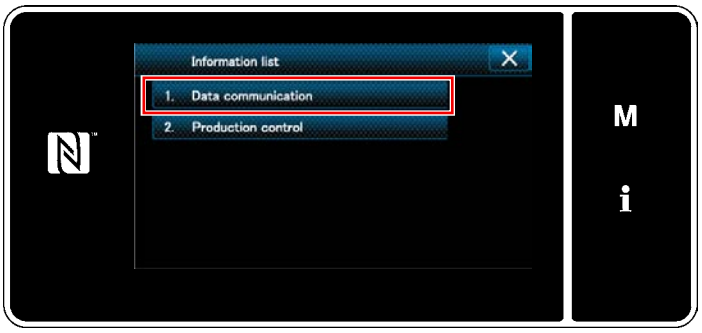

<Information screen>

1) Select "1. Data communication" on the "information screen".
The "data communication list screen" is displayed.

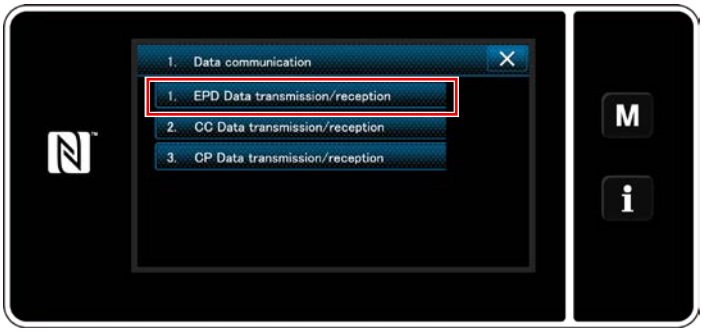

<Data communication list screen>

2) Select the transmitting/receiving data format and press the selected data format button.
For example, select "1. EPD data transmission/reception".
The "data direction selection screen" is displayed.

② Selecting the communication direction

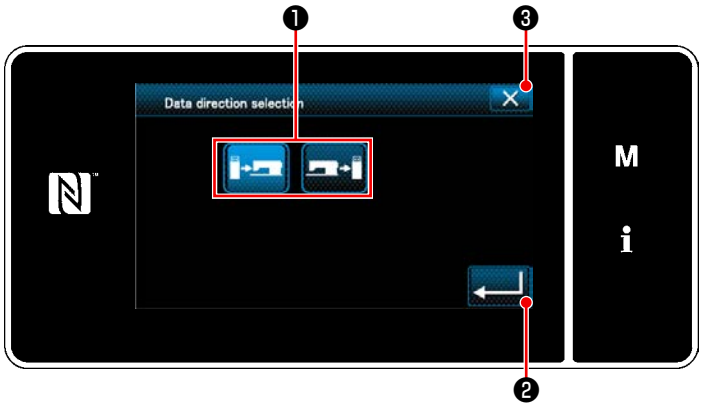

<Data direction selection screen>

Select the communication direction. Press button ❶ to put the communication direction in the selected state.

Press ❷ to confirm the setting.

The "data transmission/receipt preparation screen" is displayed.

Cancel the operation with ❸. The current screen returns to the previous screen.

③ Setting the data number and starting communication

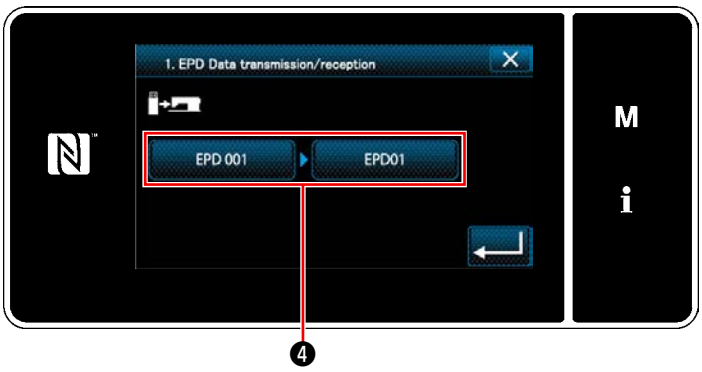

<Data transmission/receipt preparation screen>

1) Press data number button ❹ .
The "data number input screen" is displayed.

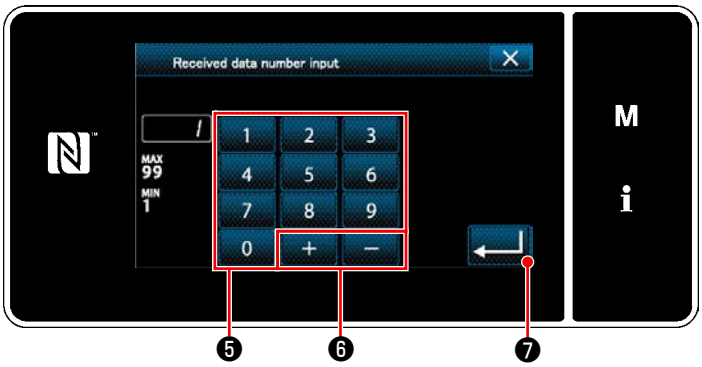

<Data number input screen>

2) Enter the source/destination data number with numeric keypad ❺ and + − ❻ .
Press ↵ ❼ to confirm the setting.
The "data transmission/receipt preparation screen" is displayed.

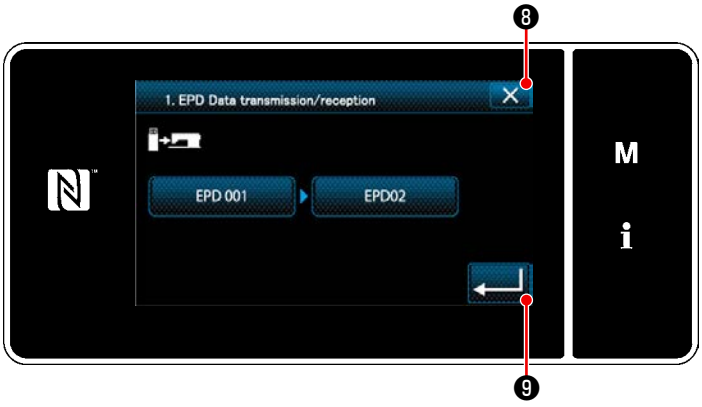

<Data transmission/receipt preparation screen>

3) Confirm the numeric value with ↵ ❾ to start communication.
"During communication" screen is displayed while the communication is being carried out.
Cancel the operation with ✕ ❽ . The current screen returns to the previous screen.
* If the destination number you have entered has already been registered, the "overwrite confirmation message" screen will be displayed.

9-9-2. USB

Sewing data, custom pitch data and condensation custom data can be copied on a commercially-available USB thumb drive.
Refer to **"9-9-1. Data communication" p. 147** for details of how to copy the sewing data on a USB thumb drive.

① Position of the USB connector

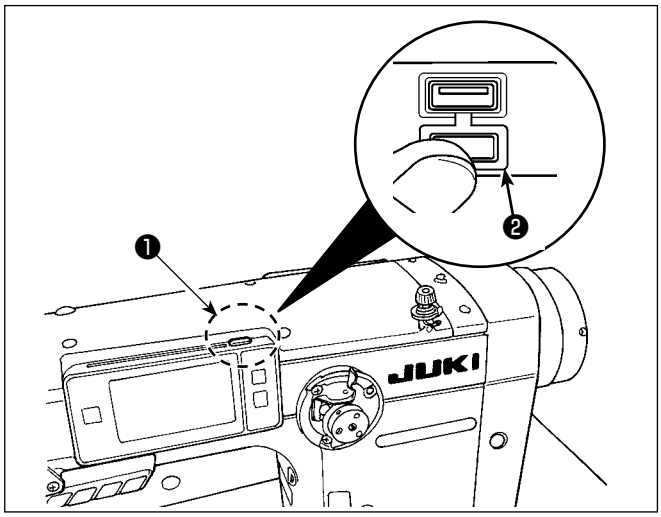

[USB thumb drive insertion position]
The USB connector is provided on top ❶ of the operation panel.
To use a USB thumb drive, remove connector cover ❷ and insert the USB thumb drive into the USB connector.

* In the case a USB thumb drive is not used, the USB connector should be protected with connector cover ❷ without exceptions.

If dust or the like enters the USB connector, a failure can be caused.

② Precautions to be taken when handling USB devices

- Do not connect to the USB connection terminal other than the USB memory.
  It may cause failure.
- Do not leave the USB device or USB cable connected to the USB port while the sewing machine is in operation. The machine vibration can damage the port section resulting in loss of data stored on the USB device or breakage of the USB device or sewing machine.
- Do not insert/remove a USB device during reading a program or sewing data.
  It may cause data breakage or malfunction.
- When the storage space of a USB device is partitioned, only one partition is accessible.
- Never forcefully insert a USB thumb drive into the USB connector while carefully checking the orientation of the USB thumb drive. Forceful insertion of the USB thumb drive can cause failure.
- JUKI does not compensate for loss of data stored on the USB device caused by using it with this sewing machine.
- In principle, connect only one USB thumb drive to the operation panel. When two or more devices/media are connected/inserted, the machine will only recognize one of them. Refer to the USB specifications.
- Do not turn the power OFF while the data on the USB flash drive is being accessed.

③ USB specifications

- Conform to USB 1.1 standard
- Applicable devices *1 ____ USB memory
- Format supported _____ FAT 12, FAT 16, FAT 32
- Applicable medium size __ 4.1MB ~ 2TB
- Consumption current ____ The rated consumption current of the applicable USB devices is 500 mA at the maximum.

*1: JUKI does not guarantee operation of all applicable devices. Some device may not operate due to a compatibility problem.

9-9-3. NFC

The operation panel supports NFC (Near Field Communication).
Sewing data, maintenance information or the like can be viewed, edited, copied, etc., on an Android terminal (such as tablet and smartphone) on which JUKI application for Android "JUKI Smart App" has been installed, by means of the NFC communication function.
Refer to the Instruction Manual for JUKI Smart App for details of JUKI application for Android "JUKI Smart App".

① Position of the NFC antenna

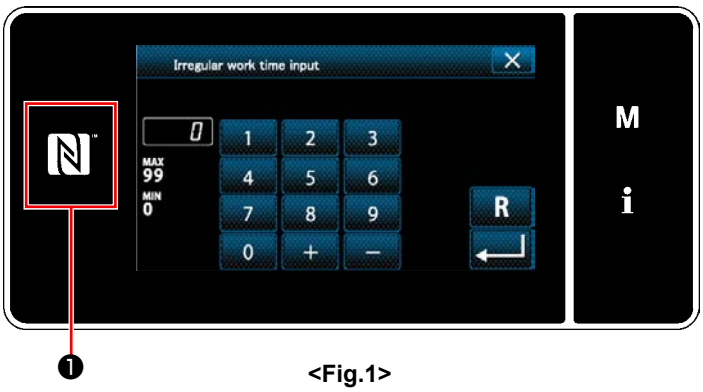

<Fig.1>

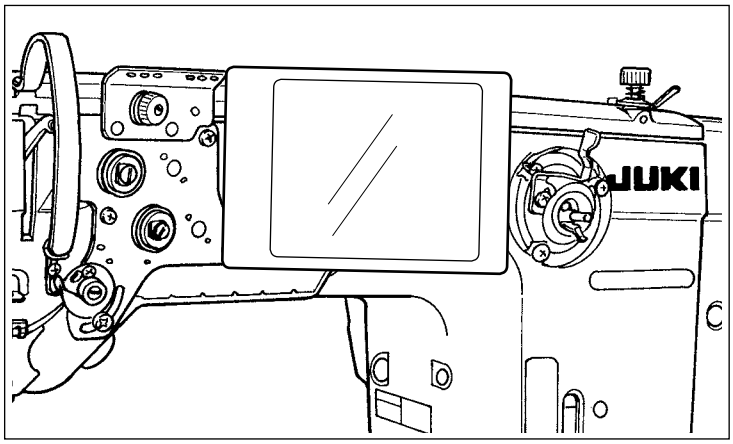

<Fig.2>

[Position of the NFC antenna]
To conduct the NFC (near field communication) between the sewing machine and the tablet or smartphone, bring the tablet or smartphone to NFC mark ❶ on the operation panel as illustrated in Fig. 2, and hold it there until the data is displayed.

* If the NFC communication has failed, error message will be displayed on the tablet/smartphone screen.

When the error message is displayed on the screen, carry out the NFC communication again.

② Precautions to be taken when handling NFC

- The position of the NFC antenna varies according to the tablet/smartphone used.
  Be sure to read the instruction manual of your device before using the NFC communication function.
- To use the NFC communication function, place the NFC communication function setting in "Enable" while referring to the instruction manual for your tablet/smartphone.

9-10. Key customization

It is possible to register a desired function to a key to customize the peel key arrays. Functions that can be assigned to panel keys are as described below.
The key to which no function is assigned is displayed in blank.

9-10-1. Assignable data

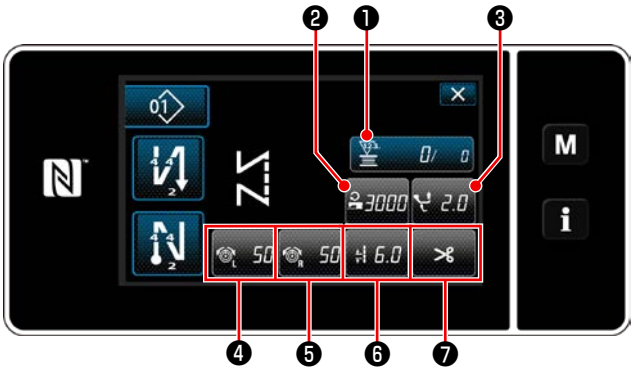

<Sewing screen (Operator mode)>

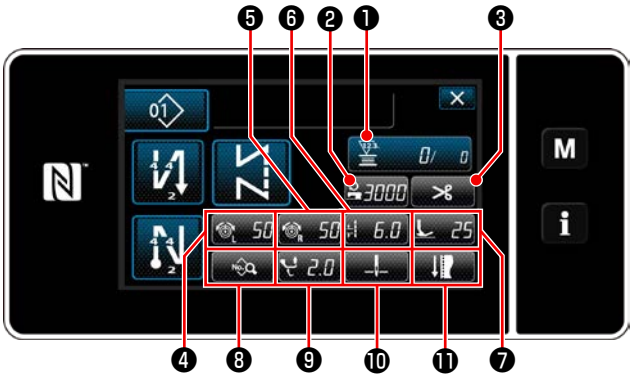

<Sewing screen (Maintenance personnel mode)>

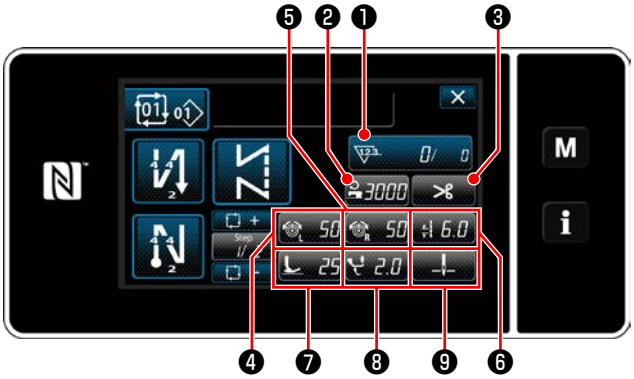

<Sewing screen (Cycle mode)>

	Initial value			Assignable data
	Operator mode	Maintenance personnel mode	Cycle mode	
❶	Counter	Counter	Counter	Sewing pattern data Sewing pattern number Cycle pattern number Memory switch One-touch changeover Bobbin winding Sewing adjustment Counter Function is not provided
❷	Sewing speed	Sewing speed	Sewing speed	Sewing pattern data Sewing pattern number Cycle pattern number Memory switch One-touch changeover Bobbin winding Sewing adjustment Function is not provided
❸	Alternating vertical movement amount	Thread trimming	Thread trimming	
❹	Needle thread tension, left	Needle thread tension, left	Needle thread tension, left	
❺	Needle thread tension, right	Needle thread tension, right	Needle thread tension, right	
❻	Stitch length	Stitch length	Stitch length	
❼	Thread trimming	Presser foot pressure	Presser foot pressure	
❽		Sewing data list	Alternating vertical movement amount	
❾		Alternating vertical movement amount	Stop position of needle bar	
❿		Stop position of needle bar		
⓫		Sewing adjustment		

9-10-2. How to assign a function to a key

① Displaying the key customization mode list screen

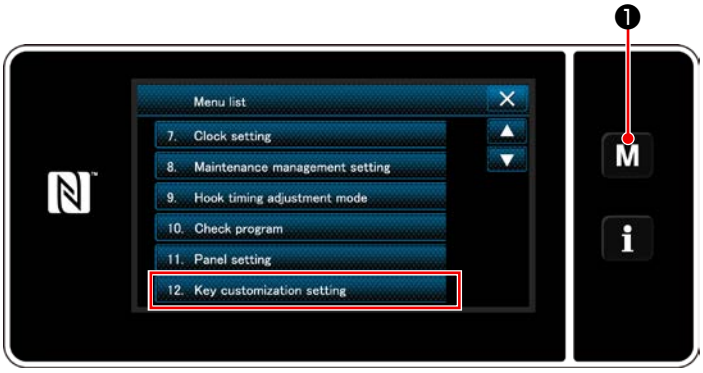

<Mode screen>

1) M ❶ held pressed for three second.
   The "mode screen" is displayed.
2) Select the "12. Key customization setting".
   The "key customization mode list screen" is displayed.

② Setting the key customization

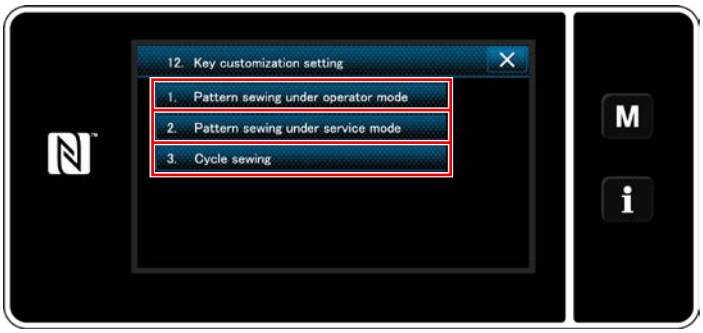

<Key customization mode list screen>

1) Select "1. Pattern sewing under operator mode". Then, "key customization assignment screen (operator mode)" is displayed.
2) Select "2. Pattern sewing under service mode". Then, "key customization assignment screen (Maintenance personnel mode)" is displayed.
3) Select "3. Cycle sewing". Then, "key customization assignment screen (Cycle mode)" is displayed.

③ Selecting a function to be assigned

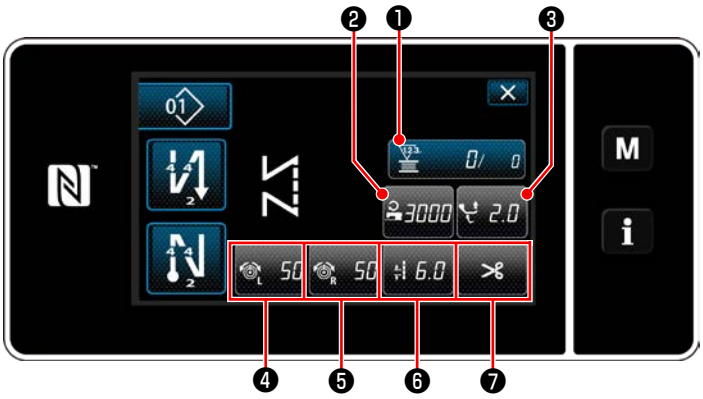

<Key customization assignment screen (Operator mode)>

The key customization selection screen is displayed by pressing one of the ❷ to ⓫ (❷ to ❼ for the operator mode. ❷ to ❾ for the cycle mode.)

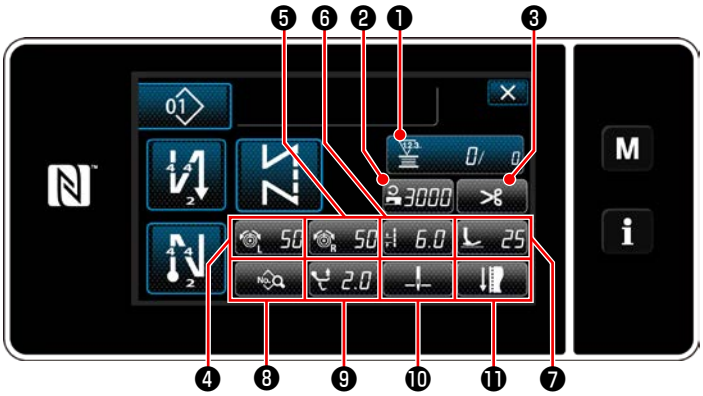

<Key customization assignment screen
(Maintenance personnel mode)>

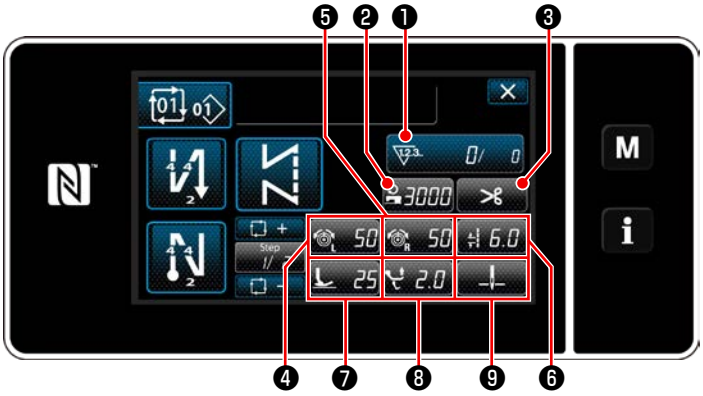

<Key customization assignment screen (Cycle mode)>

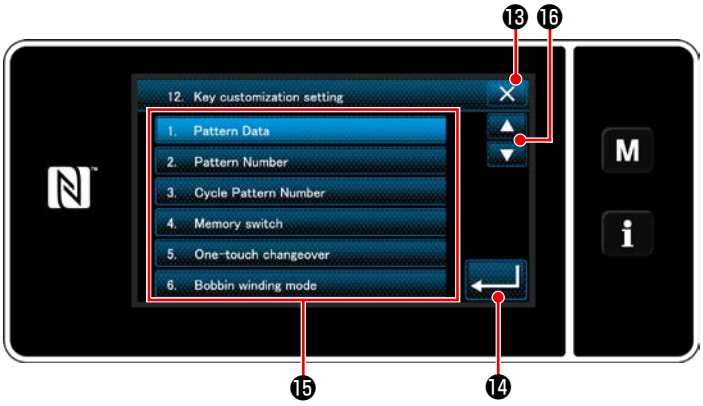

<Key customization assignment screen>

1) Press ▲▼ ⓰ and each function button ⓯ to assign the key to ❷ to ⓫ (❷ to ❼ for the operator mode. ❷ to ❾ for the cycle mode.)
2) The counter button is respectively displayed by pressing ❶ .
3) Press ↵ ⓮ to confirm the setting.

   Cancel the operation with ✕ ⓭ . The current screen returns to the previous screen.

9-11. Maintenance management function

When the set value for the counter is reached, this function gives a warning on the screen. As many as five different set values can be registered for warning.

1) M ❶ held pressed for three second.

The "mode screen" is displayed.

2) Select "8. Maintenance management setting".

3) When the counter for which the set value for warning is selected, the "warning counter setting screen" is displayed.

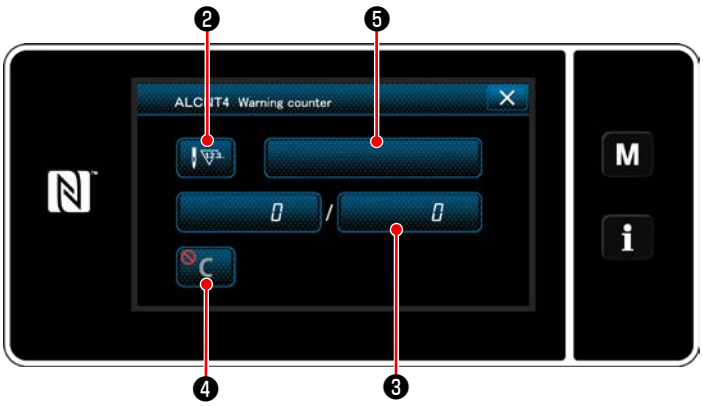

<Warning counter setting screen>

4) When ❷ is pressed, the "warning counter type selection screen" is displayed.

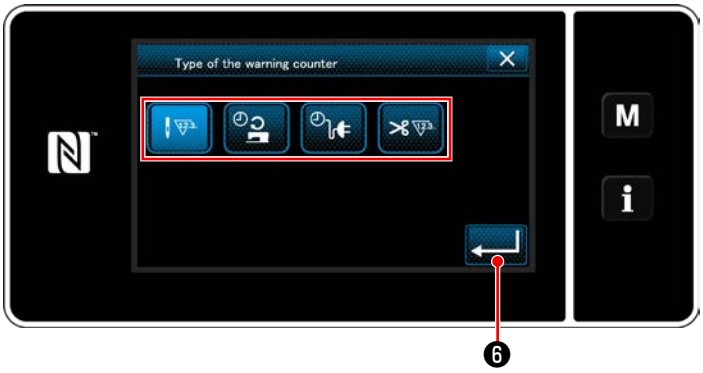

<Warning counter type selection screen>

5) Select the setting condition of the warning counter.

: Number of stitches (Unit: 1000 stitches)

: Operating time (Unit: Hours)

: Energizing time (Unit: Hours)

: Number of times of thread trimming (Unit: Number of times)

6) When ❻ is pressed, the operation is confirmed. Then, the screen returns to the "warning counter setting screen".

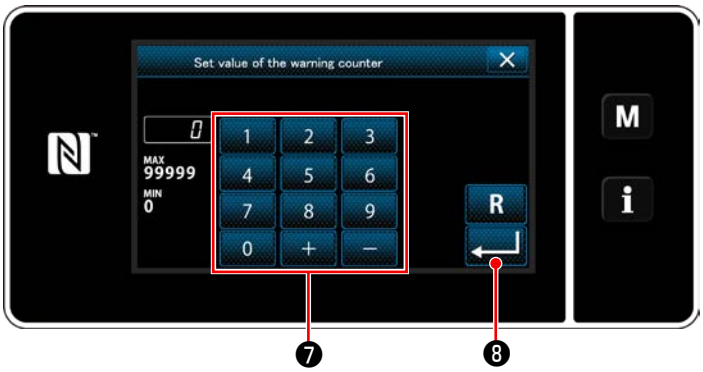

<Warning counter set value input screen>

7) When ❸ on the "warning counter setting screen" is pressed, the "warning counter set value input screen" is displayed.

8) Input the warning counter set value with numeric keypad ❼ .

9) When ❽ is pressed, the operation is confirmed. Then, the screen returns to the "warning counter setting screen".

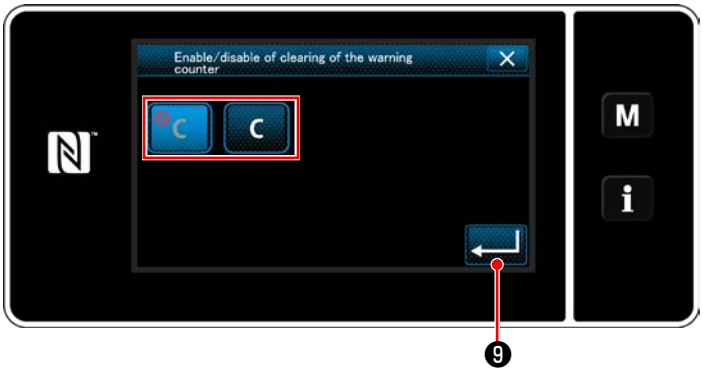

<Warning counter clearing setting screen>

10) When ❹ on the "warning counter setting screen" is pressed, the "warning counter clearing setting screen" is displayed.

11) Select enable/disable of the warning counter clearing displayed on the warning screen.

: Disable (Current-value clear key is not displayed on the warning screen)

: Enable (Current-value clear key is displayed on the warning screen)

12) When ❾ is pressed, the operation is confirmed. Then, the screen returns to the "warning counter setting screen".

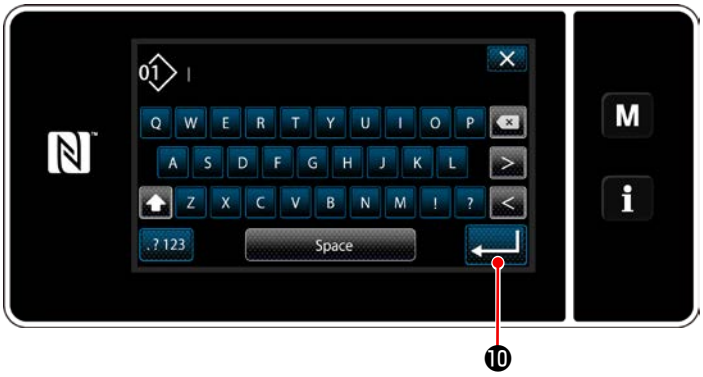

13) When ❺ on the "warning counter setting screen" is pressed, the "keyboard" is displayed.
14) Enter a name of the warning counter.
15) When ↵ ❿ is pressed, the operation is confirmed. Then, the screen returns to the "warning counter setting screen".

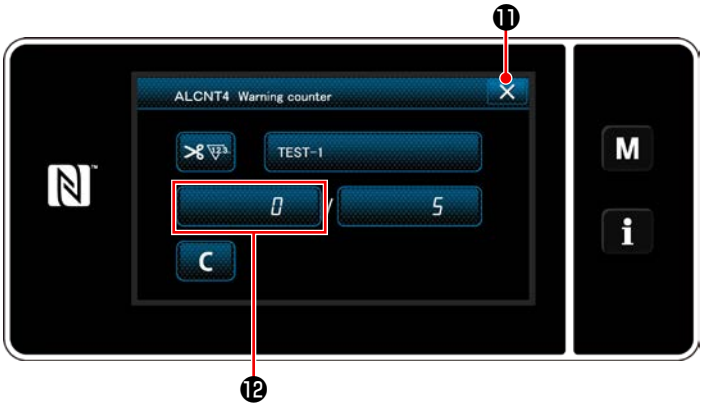

16) When ✕ ⓫ is pressed, the operation is confirmed. Then, the screen returns to the "maintenance management setting screen".

* When the sewing machine performs sewing after the warning counter has been set, number of counts is displayed in ⓬ .

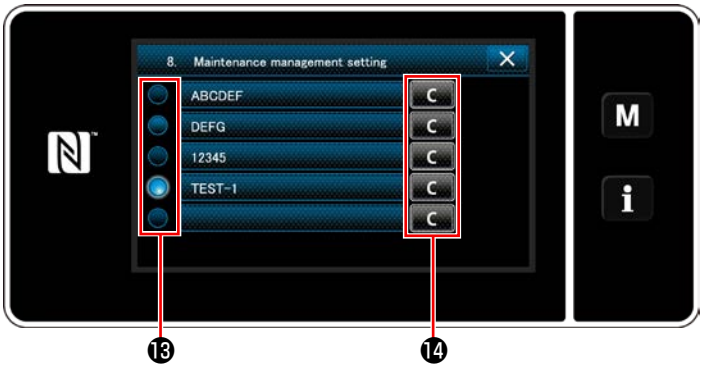

17) The warning counter selected with a check-mark in ⓭ is enabled.
18) When the relevant "C" button in ⓮ is pressed, the number of counts displayed in the corresponding counter field can be cleared.

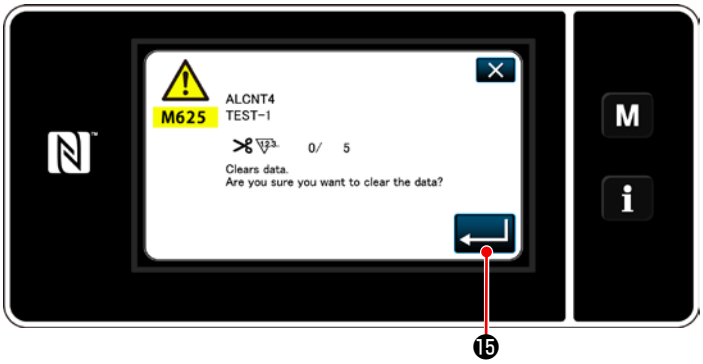

19) When ↵ ⓯ is pressed, the operation is confirmed. Then, the screen returns to the "maintenance management screen".

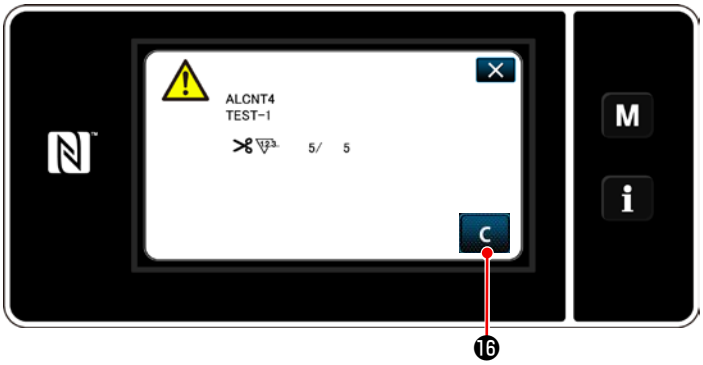

20) When the preset number of counts for the counter is reached, the warning screen is displayed.

21) Clear the number of counts by pressing C ⓰ .

* If (disable) is selected in item number 10), C ⓰ will not be displayed.

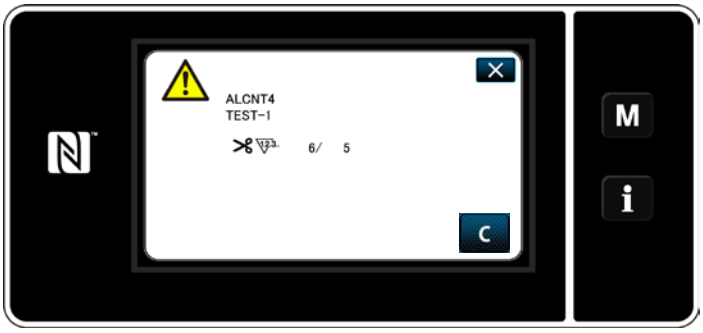

22) If the number of counts of the counter is not cleared, the warning screen will be displayed again at the time of next count.

9-12. Setting the ancillary devices

Setting the ON/OFF status of function of ancillary devices.

1) M ❶ held pressed for three second.

The "mode screen" is displayed.

2) Select "14. Incidental device setting".

<Ancillary device setting screen>

3) The "ancillary device setting screen" is displayed.
When the device setting of which is to be changed is selected, the setting screen for the selected device is displayed.

9-12-1. Setting the ON/OFF status of suspended ruler

<Suspended ruler setting screen>

1) When "2. Suspended ruler" is selected, the "suspended ruler setting screen" is displayed.
2) When "H002 Function ON/OFF" is selected, the "suspended ruler function ON/OFF setting screen" is displayed.

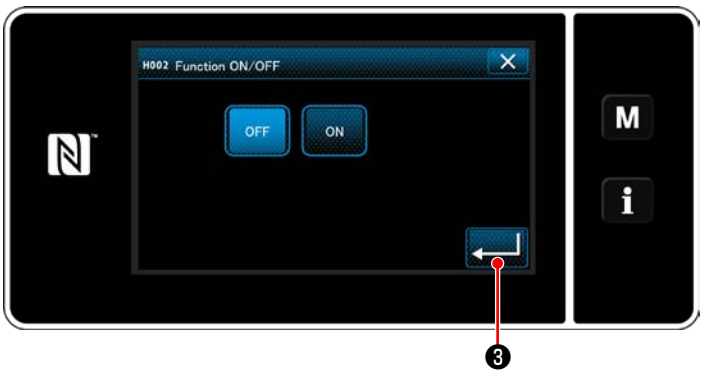

<Suspended ruler function ON/OFF setting screen>

3) Select ON/OFF status of the function.
4) Press ❸ to confirm the setting.

9-12-2. Setting the ON/OFF status of stitch skipping detecting device

<Stitch skipping detection screen>

1) When "3. Stitch skipping detecting device" is selected, the "stitch skipping detection screen" is displayed.
2) When "H003 Function ON/OFF" is selected, the "stitch skipping detection function ON/OFF setting screen" is displayed.

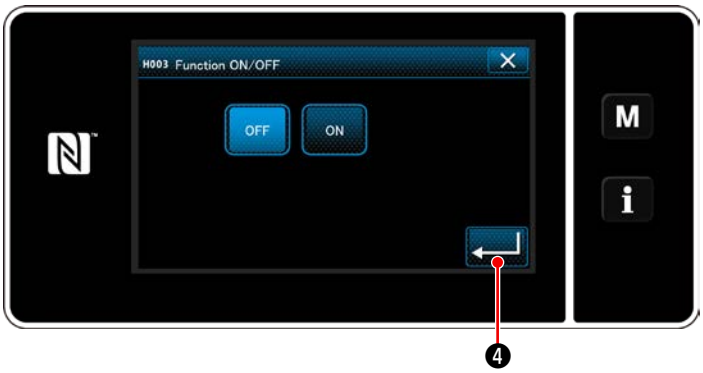

<Stitch skipping detection function ON/OFF setting screen>

3) Select ON/OFF status of the function.
4) Press ❹ to confirm the setting.

9-12-3. Setting the ON/OFF status of bobbin-thread remaining amount detecting device

<Bobbin-thread remaining amount detecting device setting screen>

1) When "4. Bobbin-thread remaining amount detecting device" is selected, the "bobbin-thread remaining amount detecting device setting screen" is displayed.
2) When "H004 Function ON/OFF" is selected, the "bobbin-thread remaining amount detecting function ON/OFF setting screen" is displayed.

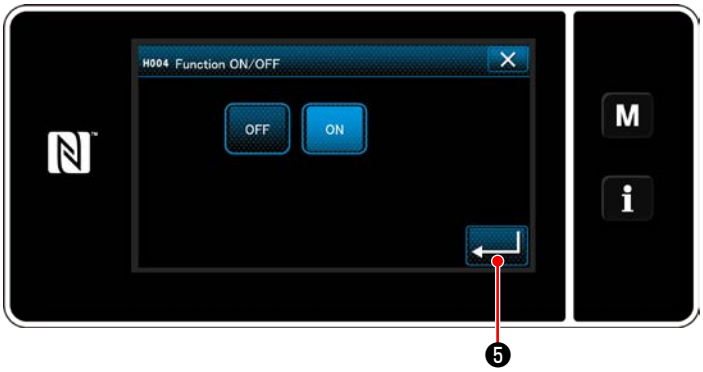

<Bobbin-thread remaining amount detecting function ON/OFF setting screen>

3) Select ON/OFF status of the function.
4) Press ❺ to confirm the setting.

9-12-4. Setting the ON/OFF status of cover sensor device

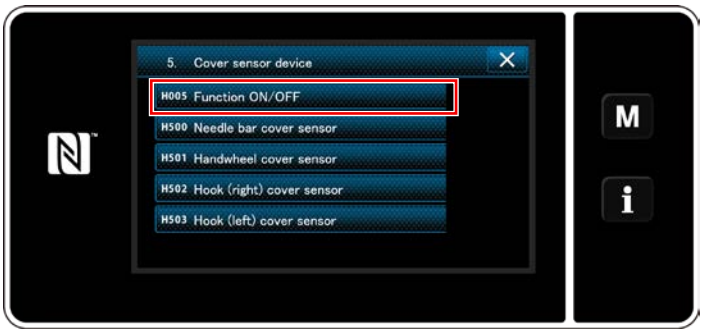

<Cover sensor device setting screen>

1) When "5. Cover sensor device" is selected, the "cover sensor device setting screen" is displayed.
2) When "H005 Function ON/OFF" is selected, the "cover sensor function ON/OFF setting screen" is displayed.

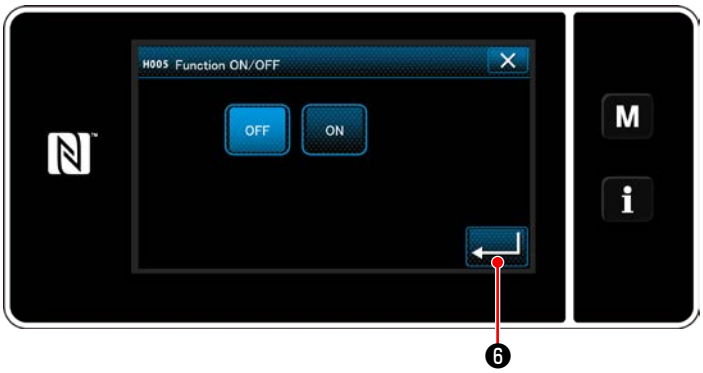

<Cover sensor function ON/OFF setting screen>

3) Select ON/OFF status of the function.
4) Press ❻ to confirm the setting.

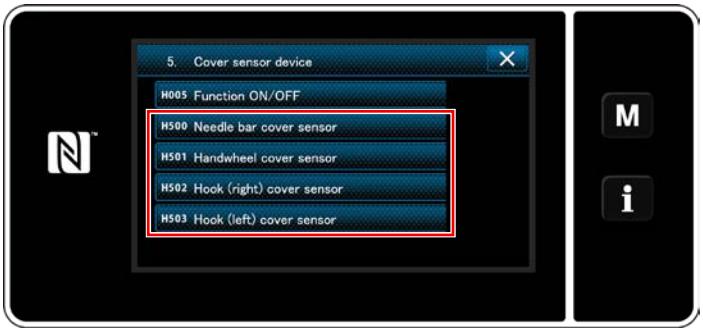

<Cover sensor device setting screen>

5) In the case the cover sensor function is placed in ON, it is necessary to set the ON/OFF status of the respective cover sensors. When the cover sensor of which is to be set is selected, the cover-sensor ON/OFF setting screen for the selected cover is displayed.

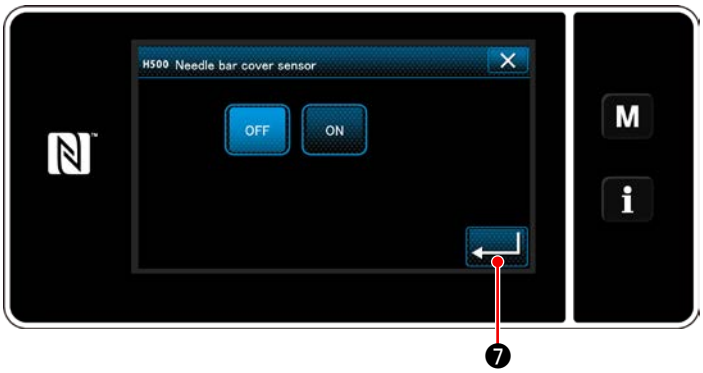

<Needle bar cover sensor ON/OFF setting screen>

6) Place the selected over sensor in ON if it is used, or in OFF if not.

7) Press ❼ to confirm the setting.

Caution

The cover sensor device does not function only by setting the ON or OFF of the corresponding cover. Place the cover sensor function in ON on the cover-sensor function ON/OFF setting screen.

10. SEWING SPEED TABLE

Operate the sewing machine at a speed equal to or lower than the maximum sewing speed selected from those shown in the table below according to the sewing conditions.
Speed setting is automatically carried out according to the stitch length and alternating vertical movement amount.

Stitch length / Amount of alternate vertical movement of the walking foot and presser foot	6 or less	More than 6 and 9 or less	More than 9 and 12 or less
3 or less	3,500 sti/min	2,000 sti/min	1,800 sti/min
More than 3 or 3.5 or less	3,400 sti/min	2,000 sti/min	1,800 sti/min
More than 3.5 or 4 or less	3,200 sti/min	2,000 sti/min	1,800 sti/min
More than 4 or 4.5 or less	2,900 sti/min	2,000 sti/min	1,800 sti/min
More than 4.5 or 5 or less	2,600 sti/min	2,000 sti/min	1,800 sti/min
More than 5 or 5.5 or less	2,400 sti/min	1,800 sti/min	1,800 sti/min
More than 5.5 or 6 or less	2,200 sti/min	1,800 sti/min	1,800 sti/min
More than 6 or 6.5 or less	2,000 sti/min	1,800 sti/min	1,800 sti/min
More than 6.5 or 9 or less	1,800 sti/min	1,800 sti/min	1,800 sti/min

*** If you use the sewing machine with the needle gauge of 20 mm or more, it is necessary to set the sewing speed to 2,000 sti/min or less.**

11. TROUBLES IN SEWING AND CORRECTIVE MEASURES

Troubles	Causes	Corrective measures
1. Thread breakage (Thread frays or is worn out.)	① Thread path, needle point, hook blade point or bobbin case resting groove on the throat plate has sharp edges or burrs.	○ Remove the sharp edges or burrs on the blade point of hook using a fine emery paper. Buff up the bobbin case resting groove on the throat plate.
	② Needle thread tension is too high.	○ Decrease the needle thread tension.
	③ Bobbin case opening lever provides an excessive clearance at the bobbin case.	○ Decrease the clearance provided between the bobbin case opening lever and the bobbin. Refer to **"8-4. Adjusting the bobbin case opening lever" p.107**.
	④ Needle comes in contact with the blade point of hook.	○ Refer to **"8-1. Needle-to-hook relation" p.105**.
	⑤ Amount of oil in the hook is too small.	○ Adjust the amount of oil in the hook properly. Refer to **"2-19. Lubrication" p.23**.
(Needle thread trails 2 to 3 cm from the wrong side of the fabric.)	⑥ Needle thread tension is too low.	○ Increase the needle thread tension.
	⑦ Thread take-up spring works excessively or the stroke of the spring is too small.	○ Decrease the tension of the spring and increase the stroke of the spring.
	⑧ Timing between the needle and the hook is excessively advanced or retarded.	○ Refer to **"8-1. Needle-to-hook relation" p.105**.
2. Stitch skipping	① Timing between the needle and the hook is excessively advanced or retarded.	○ Refer to **"8-1. Needle-to-hook relation" p.105**.
	② Pressure of the presser foot is too low.	○ Increase the presser foot pressure.
	③ The clearance provided between the top end of the needle eyelet and the blade point of hook is not correct.	○ Refer to **"8-1. Needle-to-hook relation" p.105**.
	④ Hook needle guard is not functional.	○ Refer to **"8-3. Adjusting the hook needle guard" p.107**.
	⑤ Improper type of needle is used.	○ Replace the needle with one which is thicker than the current needle by one count.
(Two or three stitches skip at the beginning of sewing.)	⑥ The bobbin thread clamp pressure is low.	○ Increase the bobbin thread clamp pressure. Refer to **"8-5. Adjusting the position of counter knife, knife pressure and clamp pressure" p.108**.
3. Loose stitches	① Bobbin thread does not pass through the tension spring of the inner hook.	○ Thread the bobbin thread correctly.
	② The hook, feed dog and/or the thread path in thread guide, etc. have worn out or have flaws.	○ Remove rough parts with a fine emery paper or buff it up.
	③ Bobbin fails to move smoothly.	○ Replace the bobbin or hook with a new one.
	④ Bobbin case opening lever provides too much clearance at the bobbin.	○ Refer to **"8-4. Adjusting the bobbin case opening lever" p.107**.
	⑤ Bobbin thread tension is too low.	○ Increase the bobbin thread tension.
(Revere feed stitching)	⑥ Bobbin has been wound too tightly.	○ Decrease the tension applied to the bobbin winder.
	⑦ The needle thread tension is low while carrying out the reverse feed stitching.	○ Advance the feed (horizontal feed) timing. (Refer to the Engineer's Manual for the adjustment procedure.)
	⑧ The needle does not match the needle hole in feed dog.	○ Change the feed dog with an appropriate one. (Refer to the Parts List.)

Troubles	Causes	Corrective measures
4. Thread slips off the needle eyelet simultaneously with thread trimming.	① Thread tension given by the tension controller No. 1 is too high. ② Thread take-up spring stroke is too large.	○ Decrease the thread tension given by the tension controller No. 1. ○ Decrease the stroke.
5. Thread slips off the needle eyelet at the start of sewing.	① Thread tension given by the tension controller No. 1 is too high. ② Clamp spring has improper shape. ③ Bobbin thread tension is too low. ④ Thread take-up spring stroke is too large.	○ Decrease the thread tension given by the tension controller No. 1. ○ Replace the clamp spring with a new one or correct the current one. ○ Increase the bobbin thread tension. ○ Decrease the stroke.
6. Faulty intertwining of the needle thread and bobbin thread at the beginning of sewing.	① The bobbin thread clamp pressure is high.	○ Decrease the bobbin thread clamp pressure. Refer to **"8-5. Adjusting the position of counter knife, knife pressure and clamp pressure" p.108**. ○ Hold the needle thread on the material.
7. Thread is not cut sharply.	① The blades of moving knife and counter knife have been improperly adjusted. ② The knives have blunt blades. ③ Bobbin thread tension is too low.	○ Refer to **"8-5. Adjusting the position of counter knife, knife pressure and clamp pressure" p.108**. ○ Replace the moving knife and counter knife with new ones, or correct the current ones. ○ Increase the bobbin thread tension.
8. Thread remains uncut after thread trimming. (Bobbin thread trimming failure when stitch length is comparatively short.)	① Initial position of the moving knife has been improperly adjusted. ② Bobbin thread tension is too low.	○ Refer to **"8-5. Adjusting the position of counter knife, knife pressure and clamp pressure" p.108**. ○ Increase the bobbin thread tension.
9. Thread breaks at the start of sewing after thread trimming.	① The needle thread is caught in the hook.	○ Shorten the length of thread remaining on the needle after thread trimming. Refer to **"4-1. Thread tension" p.33**.
10. When a heave-weight material is sewn, the material warps.	① The feed amount of the top feed is inadequate.	○ Decrease the feed dog height and reduce the feed amount of the bottom feed. (Refer to the Engineer's Manual for the adjustment procedure.)